K4000 Air Arc Gouging Torch

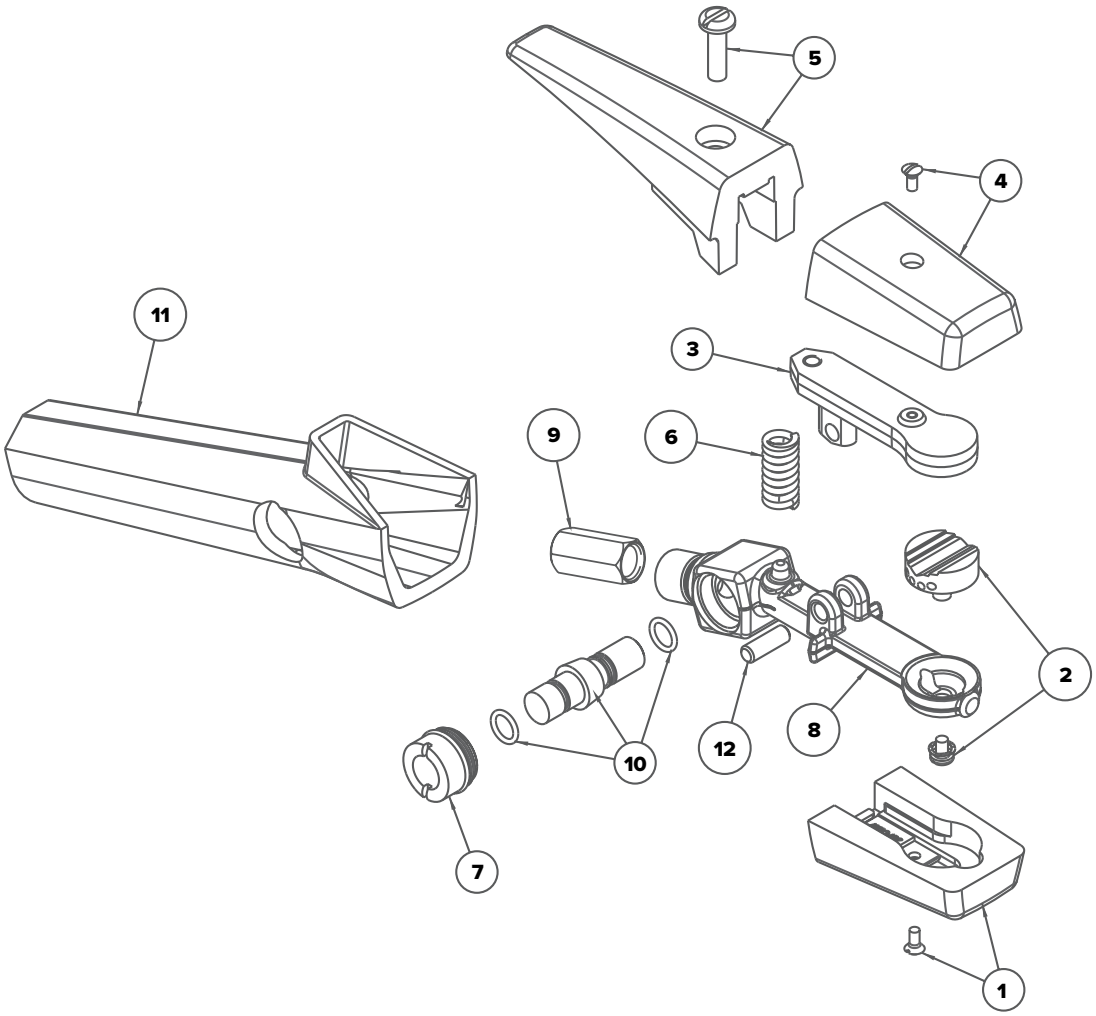

Torch Spares

1	94-433-183	K4000 INSULATOR
2	94-378-368	K4000 HEAD AND SCREW
3	94-048-088	K4000 UPPER ARM
4	94-433-183	K4000 INSULATOR
5	94-476-066	K4000 PRESS LEVER INSULATOR WITH SCREW
6	94-800-007	K4000 SPRING
7	94-104-016	K4000 VALVE BONNET
8	94-103-206	K4000 TORCH BODY ARM
9	94-170-182	K4000 CONNECTOR
10	94-801-011	K4000 SPOOL ASSEMBLY WITH O-RINGS
11	94-370-163	K4000 HANDLE
12	94-632-092	K4000 HINGE PIN

Specifications

SKU	K-4000
ELECTRODE SIZE	Round: 4.0mm-12.7mm Flat: 15.9mm
AIR REQUIREMENT	80PSI - 5.6kg/cm^2 25CFM - 708L/min
APPLICATIONS	Heavy metal removal applications such as weld preparations in pressure vessel shops and shipyards