UNIMIG

PIPE GAS CUTTER

U11466 | Operating Manual

Contents

1. Safety **3**
1.1 Regulator Safety & Operation 7
1.2 Equipment Safety 10
1.3 Setup Safety 12
1.4 Fire Safety 14
2. Gases **17**
2.1 Physical & Safety Properties of the Gases Used 17
2.2 General Care of Cylinders 19
2.3 Storage of Cylinders 20
2.4 Handling of Cylinders 20
2.5 Use of Cylinders 21
2.6 Transport of Cylinders 21
2.7 Flame Properties of the Fuel Gases 22
2.8 Applications 23
3. Package Contents **24**
4. Technical Specifications **24**
4.1 Machine Specifications 24
5. Machine Layout **25**
6. Installation **26**
6.1 Assembling the Machine 26
6.2 Checking for Gas Leaks 30
6.3 Adjusting the Chain Length 31
6.4 Attaching the Machine to the Pipe 31
7. Operation **34**
7.1 Preparing for Operation 34
7.2 Running the Pipe Cutter 34
7.2.1 Igniting the Torch 34
7.2.2 Cutting the Pipe 35
7.2.3 Moving the Cutter 35
7.3 Shutting Down 35
8. Cutting Data **36**
8.1 Oxy-Acetylene 36
8.2 Oxy-LPG 36
9. Maintenance **37**
10. Troubleshooting **38**
10.1 Gas Cutting Troubleshooting 38
10.2 Pipe Cutting Machine Troubleshooting 38
11. Gas Cutting Guide **39**
12. Gas Processes & Features Glossary **43**

1. Safety

Gas equipment can be dangerous to both the operator and people in or near the surrounding working area if the equipment is not correctly operated. Equipment must only be used under the strict and comprehensive observance of all relevant safety regulations.

Read and understand this instruction manual carefully for all system components, especially the safety instructions and warning notices before the installation and operation of this equipment.

Product specifications and features are subject to change without notice. While every effort has been made to provide accurate and current information at the time of publication, this manual is intended as a general guide and is not exhaustive regarding safety, welding, cutting, or the operation and maintenance of this unit. Due to the many variables in the welding field and the evolving nature of both the field and the UNIMIG product line, Welding Guns of Australia Pty Ltd. does not guarantee the accuracy, completeness, authority, or authenticity of the information in this manual or provided by any UNIMIG employee during conversations or business dealings. The product owner assumes all liability for its use and maintenance. Welding Guns of Australia Pty Ltd. does not warrant this product or this document for fitness for any particular purpose, performance, accuracy, or suitability of application. Furthermore, Welding Guns of Australia Pty Ltd. accepts no liability for injury or damages, whether consequential or incidental, resulting from the use of this product or from the content of this document, nor does it accept third-party claims of such liability.

Note:

- Observe the accident prevention regulations and any regional regulations.
- Safety and warning labels on the machine indicate any possible risks.
- Keep these labels clean and legible at all times.
- Technical changes due to further development in machine technology may lead to different welding behaviour.

Items in the manual that require particular attention in order to minimise damage and harm are indicated with the below symbols. Read these sections carefully and follow their instructions.

Note: Gives the user a useful piece of information.

Caution: Describes a situation that may result in damage to the equipment or system.

Warning: Describes a potentially dangerous situation. If not avoided, it will result in personal damage or fatal injury.

Safety Considerations

Safety precautions must be taken for both the operator and surrounding area when using a heat source created by mixing compressed oxygen with a fuel gas and igniting the resulting mixture.

When performing any of these processes, specific safety risks must be considered, including:

- Burns caused by flames, hot surfaces, malfunctioning hand-held tools, molten particles, and similar hazards.
- Explosions resulting from mixed gas concentrations due to fuel gas leaks from cylinders, bulk supplies, hoses, or faulty equipment connections.
- Fires caused by the ignition of flammable materials, leaking fuel gases, contact with hot slag, or using poorly maintained equipment. Such incidents have led to plant, building, ship, and bush fires.
- Ignition of materials not normally considered flammable due to oxygen enrichment.
- Violent rupture or explosion of components that have been pressurised beyond their design limits.
- Asphyxiation from displacement of breathable air by inert or toxic gases, such as leaks in confined spaces or oxygen depletion from excessive rusting within those spaces.
- Radiation exposure, primarily affecting the eyes and other exposed body surfaces.

- Hazardous fumes produced by the materials being welded, heated, or cut.
- Electric shock hazards when welding or cutting near or on cables or other high-voltage conductors.
- Additional risks to the workplace arising from any of the above hazards, particularly when working around containers, vessels, elevated surfaces, and similar environments.
- Only qualified persons should install, operate, maintain, and repair this equipment.
- During operation, keep everyone, especially children, away.

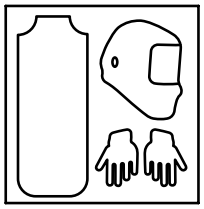

Eye & Clothing Protection

The oxy-acetylene flame produces a bright, intense light that can cause discomfort and potential injury to the eyes. To safely and comfortably view the flame while welding or cutting, welding goggles are essential.

- Always wear approved welding goggles with the correct shade of filter lens.

Recommended filter shades for various processes

Shade 4	• Oxy-cutting and gouging • Flame cleaning • Braze welding of light copper and steel • Silver brazing
Shade 5	• Fusion welding of steel, cast iron, nickel and copper • Braze welding of heavy steel and cast iron • Hardfacing
Shade 6	• Fusion and braze welding of cast iron and steel castings

- Measures should be taken to protect people in or near the surrounding working area. Use protective screens or barriers to protect others from glare and sparks.
- Wear proper PPE and body protection made from durable, flame-resistant materials like leather to protect against heat from the work and burns that may result from contact with the workpiece or molten metal.
- Suitable protective clothing, including long sleeves that fit snuggly at the wrists, leather gloves, long pants, and leather boots, must be worn while the welding or cutting operation is performed.
- Nylon and synthetic clothing and open shoes should not be worn.
- An apron, spats and a welder's cap can help protect from sparks and spatter.

Fire Hazard

Welding and cutting on closed containers, such as tanks, drums, or pipes, can cause them to explode. Flying sparks, hot workpieces, and hot equipment can cause fires and burns. Accidental contact with metal objects can cause sparks, explosions, overheating, or fire. Check and be sure the area is safe before doing any welding and cutting.

- Remove any flammable materials well away from the working area. Cover flammable materials and containers with approved covers if they cannot be moved from the area.
- Do not weld or cut on closed containers or containers that have held combustible materials, such as tanks, drums, or pipes, unless they are correctly prepared according to the required Safety Standards to ensure that flammable or toxic vapours and substances are totally removed, these can cause an explosion even though the vessel has been "cleaned".
- Vent hollow castings or containers before welding or cutting. They may explode.
- Do not weld or cut where the atmosphere may contain flammable dust, gas, or liquid vapours (such as petrol).
- Have a fire extinguisher nearby and know how to use it.

- Be alert that sparks and hot materials from welding and cutting can easily go through small cracks and openings to adjacent areas.
- Be aware that welding and cutting on a ceiling, floor, bulkhead, or partition can cause a fire on the hidden side.
- Avoid welding and cutting on tyre rims or wheels, as heating can cause tyres to explode and repaired rims may fail.
- Before welding and cutting, remove any combustible items, like butane lighters or matches, from your person.
- Post welding and cutting, thoroughly inspect the area to ensure there are no lingering sparks, glowing embers, or flames.
- Wear proper PPE and body protection made from durable, flame-resistant materials like leather.
- Read and understand the Safety Data Sheets (SDSs) and the manufacturer's instructions for adhesives, coatings, cleaners, consumables, coolants, degreasers, fluxes, and metals.

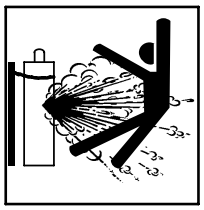

Gas Cylinders

Gas cylinders contain gas under high pressure. If damaged, a cylinder can explode. Because gas cylinders are part of the welding and cutting process, be sure to treat them carefully.

- Protect gas cylinders from excessive heat, mechanical shocks, physical damage, slag, open flames, sparks, and arcs.
- Ensure cylinders are secured upright to prevent tipping or falling over.
- Never weld or cut on a pressurised gas cylinder, it will explode and kill you.
- Open the cylinder valve slowly and turn your face away from the cylinder outlet valve and gas regulator. Stand to the side of the cylinder when opening the valve.
- Only use the correct gas, regulators, hoses, and fittings for your application and keep them in good condition.
- Keep full and empty cylinders separate.
- Keep ammonia-based leak detection solutions, oil and grease away from cylinders and valves.
- Never use force when opening or closing valves.
- Don't repaint or disguise markings and damage. If damaged, return cylinders immediately.
- When working with cylinders or operating cylinder valves, ensure that you wear appropriate protective clothing – gloves, boots and safety glasses.

Gas Buildup

The build-up of gas can cause a toxic environment and deplete the oxygen content in the air resulting in death or injury. Many gases used in welding are invisible and odourless.

- Shut off the shielding gas supply when not in use.
- Always ventilate confined spaces or use an approved air-supplied respirator.

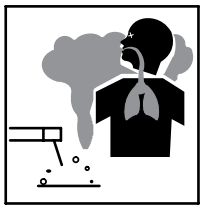

Fumes & Gases

Fumes and gases are dangerous. Welding and cutting produces fumes and gases, and breathing these fumes and gases can be hazardous to your health.

- Do not breathe the smoke and gas generated while welding or cutting. Keep your head out of the fumes.
- Keep the working area well-ventilated and use fume extraction or ventilation to remove welding and cutting fumes and gases.
- In confined or heavy fume environments, always wear an approved air-supplied respirator.
- Welding and cutting fumes and gases can displace air and lower the oxygen level, causing injury or death. Be sure the breathing air is safe.
- Do not weld or cut in locations near degreasing, cleaning, or spraying operations. The heat can react with vapours to form highly toxic and irritating gases.
- Materials such as galvanised, lead, or cadmium-plated steel contain elements that can give off toxic fumes when welded. Do not weld these materials unless the coating is removed, the area is very well-ventilated and/or you are wearing an air-supplied respirator.
- Read and understand the Safety Data Sheets (SDSs) and the manufacturer's instructions for adhesives, coatings, cleaners, consumables, coolants, degreasers, fluxes, and metals.

Refer to the Australian Standards AS 4839, "The safe use of portable and mobile oxy-fuel gas systems for welding, cutting, heating and allied processes," for a comprehensive list of safety requirements, specifications, storage, handling, maintenance, assembly and proper operation.

For further information, see the Welding Technology Institute of Australia (WTIA) Technical Note 7 "Health and safety in welding" and Technical Note 5 "Flame cutting of steels."

The UNIMIG range of gas welding and cutting equipment has been independently tested and certified to meet the relevant Australian Standards for gas welding and cutting applications.

- Regulators: AS 4267
- Gas Hoses: AS 1335
- Flashback Arrestors: AS 4603

1.1 Regulator Safety & Operation

⚠ **This equipment is designed for use with welding grade (inert) shielding gases only.**

This regulator is designed to reduce and control the flow of high-pressure gas from a cylinder down to a level that is suitable for the equipment it's supplying. Make sure the pressure regulator is designed for use with high pressure gas cylinders and that the connection nut thread matches the cylinder valve outlet.

Misuse of the equipment can lead to dangerous situations, which could result in accidents. It is crucial for users to avoid such scenarios. Prior to operating or handling the equipment, it is imperative to understand and adhere to the safety guidelines provided in this manual.

The following instructions detail specific practices for using regulators:

1. Do not expose the regulator to inlet pressures exceeding its maximum specified limit.
2. Do not pressurise a regulator if it exhibits any signs of damage, loose components, or appears to be in poor condition.
3. Never use a regulator that is leaking gas or showing signs of excessive creep (a gradual pressure build-up when the blowpipe valves are closed). If pressure continues to rise beyond 35 kPa, stop using the regulator immediately. It must be repaired or replaced before further use.
4. Do not attempt to loosen or detach any parts from the regulator without first ensuring the gas pressure has been fully released. Pressurised gas can forcefully eject a dislodged part, creating a hazard.
5. Do not open the cylinder unless a pressure regulator has been fitted.
6. An open valve should never be fully opened until resistance is encountered, but should be turned back at least half a turn to prevent the valve from becoming stuck in the open position. This can occur if the valve is left open for long periods of time.
7. Ensure the cylinder valve is fully closed and any gas within the regulator's high and low-pressure chambers has been vented before removing the device from a cylinder.
8. Do not use the regulator as a shut-off valve. To prevent gas flow when downstream equipment is not in use for an extended period, turn off the gas at the source and vent it from the system.
9. Open the cylinder valve slowly and make sure to close it after finishing. When you shut the valve, turn it just enough to stop the gas completely. Do not over tighten.
10. Always stand to the side of the regulator when opening the cylinder valve. Never position yourself directly in front of it.
11. Before opening the cylinder valve, make sure the regulator is securely fitted to the cylinder to prevent sudden gas release under high pressure.
12. Do not attempt to repair or modify the regulator.

⚠ **DO NOT USE OIL**

Never use oil, grease, or other petroleum-based substances on or near this regulator. The presence of oil can cause serious safety hazards, especially when regulators are used in applications involving high-pressure gases. Even with inert gases such as argon, contamination can lead to equipment malfunction, seal degradation, and dangerous cross-use if the regulator is later connected to flammable or oxidising gases. Always ensure all connections, fittings, and threads are clean and completely free of oil or grease before use. Failure to comply with this warning can result in fire, explosion, serious injury, or death.

User Responsibilities

This equipment will perform safely and reliably only if it is installed, operated, maintained, and repaired strictly according to the provided instructions. Regular checks are essential to ensure its ongoing safe and reliable operation.

Any necessary repairs, replacements, or adjustments must be carried out promptly. Do not use equipment that is defective. Immediate replacement is required for parts that are broken, missing, visibly worn, deformed, or contaminated.

Typically, the user will bear exclusive responsibility for any malfunctions resulting from improper usage, inadequate maintenance, or repairs conducted by individuals other than certified repair technicians.

Installation

Before connecting a pressure regulator to a full cylinder always screw out (anticlockwise) the regulation screw. This ensures that there will be no gas flow through the regulator upon initially opening the cylinder valve, reducing strain on the regulator's internal safety component (known as a diaphragm) and increasing the lifespan of the regulator.

Remove the plastic dust seal from the cylinder valve. Before attaching the regulator, ensure the cylinder valve outlet is free from any impurities that could block the orifices or damage the seats. Briefly open then immediately close the valve, directing the outlet away from both people and any potential sources of ignition. Clean the outlet with a lint-free cloth.

If grit, dirt, oil or dirty water enters the cylinder valve outlet, this may cause damage to the valve internals and result in leakage.

Match the regulator to cylinder. Never connect a regulator designed for a particular gas or gases to a cylinder containing any other gas.

To attach the regulator:

1. Attach the inlet of the regulator to the cylinder, securing it snugly with a proper wrench, but avoid over-tightening. Regulator connections can be fully threaded in by hand and then only require a fraction of a turn to achieve a gas tight seal.
2. Secure the outlet hose tightly, then connect any downstream equipment.
3. For downstream equipment that is sensitive, consider the installation of an additional safety device if the regulator does not include a built-in pressure relief feature.

Operation

Once the regulator is connected to the cylinder with the regulation screw completely disengaged, follow these steps to pressurise:

1. Position yourself to the side of the regulator and gradually open the cylinder valve. Rapid opening can cause a sudden pressure increase, potentially damaging the internal components of the regulator.
2. Ensure all valves on the downstream equipment are closed, then set the regulator to the desired working pressure.

It's advisable to perform a leak test at the connection points of the regulator using an appropriate leak detection solution or soapy water.

3. Purge any air or non-essential welding grade shielding gas from the system attached to the regulator by briefly opening and then closing each control valve. The duration of the purge process could last as long or longer than ten seconds, depending on both the length and diameter of the hose being cleared.

To adjust the operational flow rate of the regulator:

1. Slowly turn the regulator's regulation screw (clockwise) until the outlet gauge shows the desired flow rate.

> **It might be necessary to re-evaluate the flow rate of the gas through the regulator after completing an initial series of welds or cuts, as back pressure within the gas hose assembly can affect readings.**

2. To decrease the flow rate, first ensure the welding-grade shielding gas is safely vented from the regulator by opening the downstream valve. Direct the released gas to a well-ventilated area, away from any potential sources of ignition. Then, adjust the screw (anticlockwise) until the gauge reflects the desired flow rate. Finally, shut the downstream valve.

Shutdown

Always close the cylinder valve when the regulator is not in use. For shutdowns lasting longer than 30 minutes, follow these steps:

1. Close the gas cylinder or upstream valve.
2. Open downstream equipment valves to purge the lines, directing the gas to a well-ventilated area, and away from ignition sources.
3. Once the gas is fully vented, turn the regulation screw to its closed position and close the valves on the downstream equipment.
4. Prior to moving cylinders that are not fixed on a specifically designed cart, detach the regulators.

1.2 Equipment Safety

UNIMIG gas welding and cutting equipment is professionally designed, independently tested, and manufactured to comply with Australian Standards. It must be maintained and operated with full awareness of the inherent hazards associated with using oxy-fuel gas mixtures.

Safety Devices

Safety devices must always be used in oxygen-fuel gas systems, and should comply with AS 4603. Additional regulatory requirements may apply depending on your region.

UNIMIG gas welding and cutting kits are supplied with four flashback arrestors that fully comply with AS 4603. This includes:

- Two arrestors for the torch end
- Two arrestors for the regulator end

This configuration provides full protection across the system.

The gas welding and cutting kits must not be used without all four flashback arrestors installed. Failure to do so may result in a flashback event, which could cause serious injury or death.

The supplied flashback arrestors are designed to handle the flow rates required for the gas equipment and hose configurations included.

If higher flow equipment (such as large heating heads) is used, you must ensure that higher-capacity flashback arrestors are fitted to allow for correct gas flow.

For help selecting the correct arrestors, contact the manufacturer for flow rate data specific to your nozzles and tips.

The use of safety devices, including flashback arrestors and non-return valves, does not eliminate the need to follow safe operating procedures at all times.

Gas Leaks

Gas leaks are a serious hazard in any situation, regardless of the type of gas involved. Each type of gas presents its own risks:

- Fuel gases are highly flammable and can ignite even at low concentrations in air, requiring minimal energy, such as a small spark or hot surface, to trigger a fire or explosion.
- Oxygen increases the flammability of materials and will intensify any fire, making it burn hotter and faster.
- Inert gases can displace oxygen, leading to a loss of alertness and, if unnoticed, may result in asphyxiation.

Common sources of gas leaks include:

- Cylinder fittings, including valves and safety devices, that are damaged or poorly maintained.
- Valves left open when equipment is not in use.
- Breakable connections that are improperly fitted or in poor condition, such as:
  - Scored or dirty nipples
  - Worn or damaged conical seatings
  - Damaged or missing O-rings
- Hoses in poor or aged condition.

A typical oxygen-fuel gas system includes many connection points - cylinder valves, regulators, hoses, blowpipes, tips, and nozzles - all of which are potential leak points if not properly maintained.

If a leak is suspected or detected:

1. Stop all operations immediately.
2. Attempt to rectify the leak right away, if safe to do so.
3. Turn off or remove all ignition sources from the area.
4. Evacuate and ventilate the area until the gas has safely dispersed.

Hoses & Fittings

- Only use blue hoses for oxygen.
- Acetylene hoses must be red and LPG hoses must be orange. These hoses have different test methods and cover materials and must never be interchanged.
- All hoses must be protected from heat, sparks, slag, mechanical damage, oil, grease, and foot traffic to prevent piercing, burning, or other forms of failure.
- Avoid running hoses over sharp edges, manifolds, or through areas exposed to sparks or hot slag from welding and cutting.
- Hoses and fittings must comply with AS 1335, be securely attached, and leak-free.
- Wire must never be used to fasten hoses to fittings.
- Oxygen fittings use right-hand threads, while fuel gas fittings use left-hand threads.
- Only use UNIMIG hoses and connectors when replacing components.
- The maximum recommended hose length is 15 metres per gas line, or such distance that allows the operator to remain within sight of all connected gas cylinders, whichever is shorter.

Blowpipes, Cutting Attachments & Mixers

Blowpipes control and mix oxygen and fuel gases using a dedicated gas mixer. To ensure safe and effective operation, the following precautions must be followed:

- Ensure the inlet connections match the welding hose fittings provided. Never attempt to force incompatible fittings or connections. All fittings must be tight and leak-free.
- Control valves must be clearly labelled ‘O’ for oxygen and ‘F’ for fuel, and colour-coded blue and red to match the corresponding welding hoses.
- Only use mixers and attachments that are specifically designed to fit the blowpipe being used.
- Keep all components clean and free from oil or grease. Never handle blowpipes, cutting attachments, mixers, or accessories with oily rags, hands, or gloves.
- Always follow the manufacturer’s recommended maximum and minimum operating pressures and flow rates for your blowpipe, mixer, tip, or nozzle.
- Never hang a blowpipe or gas hose from a regulator or gas cylinder valve.
- Never use a flame to test for gas leaks.

Tips, Nozzles & Fittings

- UNIMIG tips and nozzles are clearly marked with important usage information, including tip size, recommended gas pressures, and plate thickness ranges for cutting applications.
- Always use tips and nozzles that are matched to the specific fuel gas in use (e.g. acetylene or LPG).
- Tips and nozzles are designed to operate safely and efficiently within a limited flow range. Exceeding or dropping below these ranges can affect performance and increase the risk of flashback or overheating. Always follow the manufacturer’s recommended operating pressures and flow rates to prevent this risk.
- When setting operating pressures, consider the pressure drop that may occur due to long hose lengths, small hose diameters, or the presence of additional safety devices in the gas line.

Machine Operation

- Mount and centre the machine correctly and confirm proper motion before beginning operation.
- Never move the machine while the preheat flame is on.
- Take great care with spatter and dross when operating the machine above the ground, as it can injure people below.
- Maintain appropriate chain tension, as insufficient tension can cause the machine to slip.
- Keep hands clear of all moving parts, including the space between the upper plate and slide bracket, the wing bolt when stretching the chain, and rotary sections such as sprockets and wheels.
- Handle the machine carefully when changing the chain.
- Do not use deformed or rusted chains, as they may become disengaged.
- Ensure the chain is correctly oriented, with the top and bottom sides not reversed.
- Use the correct number of chains for the pipe size.
- Do not place the machine on pipes when it is not in use.
- Handle the wheel with care to avoid damage.

1.3 Setup Safety

The UNIMIG gas welding and cutting kit consists of multiple components designed to work together as a system. For safe operation, any replacement parts used in the future must be genuine UNIMIG components or fully compatible parts specifically suitable for use with UNIMIG gas equipment.

Fuel Gas

The choice of fuel gas will directly impact several key system parameters, particularly equipment selection and operating pressures.

- Only use equipment that the manufacturer has explicitly specified for use with the chosen fuel gas.
- Acetylene must not be used at pressures exceeding 150 kPa downstream of the pressure regulator (refer to AS 4267).
- Gas suppliers recommend that the acetylene draw rate should not exceed 1/7 of the cylinder's capacity per hour. For a standard 7m^3 acetylene cylinder, this limits the maximum flow rate to 0.14m^3/hr (17 L/min).
- LPG components, especially regulators and hoses, must never be used in acetylene systems.
- For LPG systems, only use components that are explicitly designated for LPG. Multi-fuel components may be used only if the manufacturer lists LPG as a supported gas.
- LPG systems are generally not subject to a maximum outlet pressure limit. However, at low temperatures, the vapour pressure in the cylinder may prevent high system pressures.
- A common upper pressure limit for LPG systems is 400 kPa.

Flow Capacity

The tip or nozzle being used dictates the required system pressure and flow rate, which directly determines the pressure regulator settings.

- Always account for pressure drops, especially when using long hoses, small-diameter hoses, or multiple safety devices.
- Excessive pressure drops can cause unstable system behaviour, including the flame retreating into the tip, which may lead to overheating, backfire, or flashback. Pressure drops are particularly important when using acetylene, as it is limited to a maximum pressure of 150 kPa.

Always follow the manufacturer's guidelines for pressure settings, flow rates, and component compatibility.

Leak Testing

Before initial use, inspect all breakable connections, valves, and glands for leaks. Use a pressure drop method or a leak-detection fluid to check for leaks.

Do not rely on smell alone to check for leaks, as many individuals have a reduced sense of smell.

Never use a flame to test for leaks.

Purging the Gas

Purge oxygen and fuel gas hoses before use at the start of each day and after extended periods of inactivity.

Purging must never be carried out in confined spaces or near ignition sources. Refer to the operating instructions for the correct purging procedure.

Lighting the Blowpipe

- Only use flint lighters or stationary pilot flames to ignite the gas flame.
- Do not use hot metal, matches, welding arcs, or hot electrodes to light or re-light the blowpipe.
- Ensure the flame does not come into contact with nearby personnel or combustible materials during ignition.
- Always follow the correct lighting procedure as outlined in the operating instructions.

Operation Intervals

When the blowpipe is not in use, close off both the oxygen and fuel gas at the supply. Blow down the hoses to prevent pressure build-up, leakage, or damage to gauges.

- Always store blowpipes and hoses in a safe location where they cannot be damaged or cause injury.

1.4 Fire Safety

Backfires & Flashbacks

Flame instability at the tip or nozzle is a common cause of emergencies in oxygen-fuel gas systems. These incidents may occur during lighting up or during operation.

The most common causes include:

- Incorrect lighting procedures (especially failing to purge hoses).
- Low gas pressure at the tip or nozzle due to restricted gas flow.
- Damaged or poorly maintained equipment.
- A combination of the above factors.

These issues typically present as one of the following: backfire, sustained backfire or flashback.

Backfire

A backfire is the sudden return of the flame into the blowpipe, usually with a popping sound. The flame may be extinguished or re-ignite at the nozzle.

Sustained Backfire

A sustained backfire occurs when the flame continues to burn inside the neck or handle of the blowpipe. It begins with a popping sound, followed by a hissing noise caused by internal burning. If this occurs:

1. Immediately shut off the gases at the blowpipe; oxygen first, then the fuel gas.
2. Inspect the nozzle or tip condition, gas pressures, and all torch and cylinder connections before restarting.

Flashback

A flashback is a severe condition where the flame travels back through the blowpipe and into the hoses, potentially reaching the regulators or even the gas cylinder. This can cause dangerous heating and decomposition of the gas contents.

If a flashback occurs:

1. Immediately close the oxygen valve on the blowpipe, followed by the fuel gas valve.
2. Close the cylinder valves.
3. If any cylinder shows signs of heating, cool it down according to emergency procedures.
4. Inspect all equipment and check for faults or unsafe conditions before resuming use.
5. Any hose that has experienced a flashback must be discarded and replaced, even if it appears undamaged.

Ignition of Oxygen Regulators, Hoses & High-Pressure Equipment

Although incidents involving ignition of oxygen equipment are rare, when they do occur, the consequences can be severe, including serious injury, major fires, or fatalities. For this reason, extreme care must be taken when using and maintaining oxygen regulators, hoses, and other high-pressure components.

Ignition can occur for several reasons, including spontaneous ignition from contamination, use of incorrect or incompatible equipment, particle ignition from high-velocity gas, the rapid opening of the cylinder value, or direct flame contact from a nearby acetylene cylinder.

Spontaneous Ignition From Contamination

Oil, grease, and other hydrocarbon liquids can ignite spontaneously in the presence of high-pressure oxygen.

- Never allow oil or grease near oxygen regulators, valves, hoses, or any high-pressure equipment.
- Do not use oil or grease as thread lubricants, and avoid using oily rags, oily tools, or operating equipment with greasy hands.

Use of Incorrect or Incompatible Equipment

Only use equipment rated and marked specifically for oxygen use, with a pressure rating equal to or greater than that of the oxygen cylinders in use.

Regulators, manifolds, and high-pressure leads must be clearly marked for oxygen, kept clean, and maintained in good working condition.

Particle Ignition From High-Velocity Gas

Dirt or particles in fast-moving oxygen streams (such as through pipes or valve seats) can ignite in seals or seating surfaces. Ensure cleanliness in all fittings and connections.

- Always “crack” the cylinder valve momentarily (away from people and equipment) before fitting any regulator, to clear debris.

Rapid Opening of the Cylinder Valve

Opening an oxygen cylinder valve too quickly can generate excessive heat at the regulator seat and seals, leading to ignition.

- The oxygen cylinder valve MUST be opened slowly to prevent high-temperature shock to the system.

Direct Flame Contact From a Nearby Acetylene Cylinder

Although rare, incidents have been reported where oxygen cylinders have exploded due to direct flame contact from a nearby acetylene cylinder.

- The fusible plugs on the overheated acetylene cylinder melt, releasing gas.
- The escaping gas ignites, and the flame makes direct contact with the adjacent oxygen cylinder.
- This causes the oxygen cylinder wall to soften, bulge, and rupture, even without a significant rise in internal pressure.
- In such cases, the bursting disc may not activate, meaning there is no pressure relief, and the cylinder fails structurally.

Oxygen and fuel gas cylinders should be stored a safe distance apart (3m or more). When oxygen and acetylene cylinders are stored or used side by side, additional protection should be considered:

- Install a non-flammable shield between the cylinders.
- Suitable materials include a 2-3mm steel sheet or refractory fibre board.
- The shield should extend from the shoulder of the acetylene cylinder up to the top of the oxygen regulator.

Actions to be Taken in the Event of a Cylinder Fire

Gas cylinders can explode in a fire. The most frequent incidents involve ignition of fuel leaks at regulator or hose connections located near the cylinder. If there are cylinders in a fire, the following actions should be taken:

- Immediately close the cylinder valve or back off the regulator adjusting screw using a gloved hand, and extinguish the fire if possible.
- If the fire cannot be extinguished quickly, use a dry powder or CO_2 extinguisher and then close the cylinder valve to prevent re-ignition.
- If extinguishing attempts fail, do not continue. Evacuate the area (minimum 100m).
- Call the fire department.
- Direct others within a 100 to 300m area to take cover.
- If attempting to extinguish the fire, do so from a protected position and use large volumes of water.
- When the fire fighters arrive, inform them of the location, number and names of gas cylinders in the area.
- Gas cylinders not directly in the fire and that have not heated up should be moved as quickly as possible to a safe place so long as this can be done without undue risk, and ensure the cylinder valves are closed.
- Heated cylinders (especially acetylene) can explode even after the flames have been extinguished.
- Notify your gas supplier as soon as possible.
- If you are unsure of the gas contents, treat the situation as though acetylene is involved and follow the strictest safety protocols.

Acetylene Cylinder Overheating

Acetylene cylinders can become overheated due to flashback or external heat sources, such as contact with hot equipment or surrounding fires. Overheating poses a significant safety risk and must be addressed immediately.

If overheating is detected, follow this procedure:

- Shut the cylinder valve immediately and notify the gas supplier as soon as possible. If the cylinder is actively on fire, call the fire department immediately.
- Evacuate the area of all personnel.
- Begin cooling the cylinder using a large, continuous supply of water, preferably from a fire hydrant. The operator should remain behind a protective barrier while doing this.
- If the cylinder's safety device activates and the escaping gas ignites, continue cooling but do not extinguish the flames. If the gas does not ignite, all nearby ignition sources must be removed, but only if it can be done safely.
- Continue the cooling process, pausing periodically to observe whether the cooling water evaporates from the surface of the cylinder or remains.
- Once the water no longer evaporates and the cylinder remains wet, it should be moved, if safe to do so, to an open area away from ignition sources. The cylinder should then be submerged in water, such as in a 200-litre drum.
- Continue the cooling process for at least 24 hours, or as instructed by a qualified authority.

2. Gases

The flames used in gas welding, cutting, and related processes are produced by igniting mixtures of oxygen and suitable fuel gases, with acetylene and LPG being the most commonly used.

All of these fuel gases, especially when combined with compressed oxygen, can release extremely large amounts of energy as heat or through explosion, and they require only minimal energy to initiate such reactions.

As a result, they must always be handled with extreme caution and in strict accordance with clearly defined safety procedures.

Each fuel gas & oxygen combination requires careful handling, from the management of gas supplies to the point of ignition. Leaks significantly increase the risk of fire and explosion, and asphyxiation is also a potential hazard due to the displacement of air in areas where leaks occur.

All fuel gases possess specific properties that necessitate additional safety precautions.

Certain industrial gases may be flammable, oxidising, toxic, or corrosive, and handling them demands special precautions. Users must always keep Material Safety Data Sheets (MSDS), typically available from gas suppliers, for every type of gas stored or used on-site.

The table below provides a summary of the properties, characteristics, and associated hazards of the most commonly used gases.

Property	Oxygen (O_2)	Acetylene (C_2H_2)	LPG (C_3H_8)
Density relative to air	1.103	0.901	1.52 to 2
Ignition limits V% in air		2.5 to 80	2.2 to 9.5
Ignition limits V% in oxygen		2.5 to 80	2 to 57
Ignition temp °C in air		423	554
Ignition temp °C in oxygen		428	530
Flame temp in air		2325	1925
Flame temp in oxygen		3100	2800
Smell	Odourless	Pungent	Pungent
Gas cylinder colour (AS 4484)	Black	Maroon	Silver/Grey
Regulator colour (AS 4267, AS 4480)	Black	Red	Orange
Welding hose colour (AS 1335)	Blue	Red	Orange
Safety device colour (AS 4603)	Blue	Red	Red

2.1 Physical & Safety Properties of the Gases Used

Oxygen

Oxygen cylinders are black and are compressed to 17,500 kPa. The pressure of the cylinder directly relates to the quantity of the gas. If the gas pressure is at half, only half the cylinder remains.

Oxygen is odourless and is generally considered non-toxic at atmospheric pressure. Pure oxygen is a single element (O_2) and makes up about 21% of the air by volume. When fuel gases are burned in pure oxygen, they reach higher temperatures compared to burning in regular air. Oxygen enhances the combustion process, increasing the flame's heat output.

Air is a mixture of gases. It contains approximately 78% nitrogen, 21% oxygen, and small amounts of argon (0.93%), carbon dioxide (0.04%), and trace gases. Gases react differently in oxygen compared to air.

Oxygen should never be called air.

Oxygen itself does not burn but supports and accelerates combustion in other substances, including those not normally considered combustible and which may be readily ignited by sparks.

If the pressure of an oxygen cylinder rises due to a fire, a bursting disc safety device will fracture before the cylinder can rupture.

Oxygen in contact with oil, grease, rust, or other hydrocarbons can cause spontaneous ignition, potentially leading to fires or explosions. Therefore, all oxygen systems, such as cylinders, pipework, regulators, and blowpipes, must be kept entirely free from these contaminants to prevent violent reactions.

Proper advice should always be obtained, such as from gas suppliers or equipment manufacturers, before using any materials with oxygen. This is especially important for lubricants, seals, and thread sealants, including PTFE tape, unless they are specifically supplied and clearly marked as suitable for use with oxygen.

When working with oxygen, the following should be taken into account:

- Do not use oxygen to “refresh” or “sweeten” the air to improve air quality after welding or cutting. Gas cylinders under pressure can release large volumes of oxygen in a short time, creating a highly dangerous environment.
- Take care in confined spaces. Even slow leaks can cause hazardous conditions.
- Do not leave blowpipes or hoses connected to the supply gases within confined spaces.
- Ventilate confined spaces to reduce the risk of increased oxygen content in the air.
- Do not use oxygen as a substitute for compressed air.
- Never use oxygen to start engines, drive air tools, etc.
- Do not use oxygen or compressed air to dust off clothes. Clothes can become readily flammable and even self-igniting through oxygen enrichment.
- Do not kink pressure hosing. Gas can still bleed through the system or, more seriously, escape rapidly should the operator lose their grip or the hose rupture.

Each year, numerous accidents, ranging from minor injuries to fatal incidents, occur due to the misuse of oxygen or a failure to understand its properties and the risks associated with them.

Acetylene

Acetylene cylinders are maroon. It is a highly flammable gas in both oxygen and air. Acetylene cylinders are filled with a porous mass and acetone. The gas is dissolved in the acetone, allowing it to be stored safely up to 1,800 kPa. This is what gives acetylene gas the name ‘dissolved acetylene’ or ‘DA’.

Acetylene has a distinctive garlic smell. It is non-toxic, but it can lead to asphyxiation through the depletion of oxygen. Acetylene is lighter than air, so leaked acetylene will dissipate. However, a concentration of as little as 2.5% in the air can burn.

Acetylene can react with metals such as copper and silver to produce explosive acetylides. Copper alloys containing more than 70% copper or 43% silver should never be used with acetylene under pressure. Copper welding tips and nozzles are safe to use as they are downstream of the gas mixer.

Acetylene cylinders have fusible plugs in the neck ring, which will melt in the event of a fire.

The oxy-acetylene flame produced reaches 3,160°C and is the hottest flame available for gas welding mild steel. Tips and nozzles used with acetylene are stamped ‘A’ (for acetylene). They must not be used with LPG.

When working with acetylene, the following should be taken into account:

- High-pressure acetylene gas is unstable and must never be used outside the cylinder at a pressure exceeding 150 kPa.
- In its free state under pressure, this gas can decompose with explosive force, which is why it is stored in specially designed cylinders.
- Explosions can occur in pure acetylene subjected to excessive temperature or pressure.
- Mechanical shock to the cylinder due to mishandling or overheating when under high pressure may also cause decomposition, giving rise to high temperatures and possible detonation even in the absence of oxygen.
- Flashback in welding, heating, or cutting blowpipes is another potential cause of detonation, which is why safety devices are strongly recommended in the blowpipe gas supply line.

Acetylene’s properties are carefully considered in the design of storage and supply systems, and when safe procedures are followed, hazardous situations can be effectively prevented.

Liquified Petroleum Gas (LPG)

Liquified Petroleum Gas (LPG) cylinders are silver. It is a flammable gas and is stored as a liquid in the cylinder at a pressure of less than 1,000 kPa.

Standard LPG has been artificially odourised and has a fish-like smell for safety. It is non-poisonous, but it can lead to asphyxiation through the depletion of oxygen. LPG consists primarily of propane (C3H8) as well as a mixture of other gases.

LPG is heavier than air and will collect in low-lying or confined spaces, e.g. ducts, drains, basements, and closed tanks. A concentration of as little as 2.2% in the air can burn.

LPG cylinders have a spring-loaded safety device that releases gas in the event of the cylinder being overheated or overfilled.

The oxy-LPG flame produced is not suitable for gas welding mild steel, but is used for heating, brazing and cutting. Tips and nozzles used with LPG are stamped 'P' (for propane). They must not be used with acetylene.

When working with LPG, the following should be taken into account:

- It is a fire and explosion hazard and requires minimum energy to ignite when mixed with air or pure oxygen.
- LPG will ignite and burn instantly from a spark or piece of hot metal.

2.2 General Care of Cylinders

Cylinders used for oxygen, acetylene, and LPG are thin-walled, highly pressurised vessels. Due to the high internal pressure, both full and partially filled cylinders can cause serious injury or damage if they rupture. Slow gas leaks may also pose risks of fire, explosion, or asphyxiation.

- Oxygen, hydrogen, carbon dioxide, and inert gas cylinders are fitted with bursting disc safety devices.
- LPG cylinders are fitted with spring-loaded pressure relief valves.
- Acetylene cylinders are filled with a porous material saturated with acetone and these cylinders also include fusible safety plugs to allow safe gas escape during overheating.

Because of these risks and the specific properties of stored gases, the following precautions must be taken when handling and using cylinders:

- Cylinders are typically hired or loaned from gas suppliers, who ensure they undergo the periodic testing required by Australian Standards and statutory regulations.
- Do not tamper with cylinder markings or colour codes. Never use cylinders without labels or identifying colour codes. If unsure, return the cylinder to the supplier.
- Cylinders must only be refilled by authorised, competent organisations using the correct gas and with the owner's permission. Refilling with an incorrect gas is not allowed.
- Only use gases for their intended purpose. For example, do not use oxygen for dusting, ventilation, or breathing support.
- Always identify gases by their correct names to avoid dangerous mix-ups.
- Never attempt to disguise or repair a damaged cylinder (e.g. dented). Seek guidance from the gas supplier before use.
- Protect valve seats and outlets from dirt and contamination during connection or disconnection. Dirt, fibres, or oil can enter the system, causing leaks or ignition. This is especially dangerous with high-pressure oxygen, which can ignite oils or hydrocarbon residues. Report any valve or outlet damage.
- Keep cylinders away from any heat sources, such as furnaces, radiators, or welding flames. Avoid the flame from directly contacting cylinders or equipment surfaces from cutting or welding blowpipes. The fusible plugs in acetylene cylinders are particularly sensitive and overheating may lead to an acetylene flame venting vertically.
- Never tamper with safety devices.
- Always return cylinders with the valve properly closed.

2.3 Storage of Cylinders

UNIMIG gas welding and cutting equipment is intended for use with gases supplied from compressed gas cylinders. In all instances, gas supplies may be governed by statutory or regulatory requirements. Numerous Australian Standards apply to this area.

The placement, separation, permitted quantities, and appropriate signage for gas storage must comply with the relevant statutory regulations and the manufacturer's guidelines.

When storing gas cylinders, all requirements in the Australian Standard AS 4332:2004, "The storage and handling of gases in cylinders" and Dangerous Goods regulations must be followed. These include:

- Do not store cylinders near combustible materials or flammable liquids.
- Keep cylinders away from heat sources (e.g. open flames).
- Keep cylinders in well-drained areas away from water.
- Keep cylinders in well-ventilated areas, ideally not in confined spaces.
- Keep cylinders clean at all times.
- External storage is preferred whenever possible.
- Weather protection is desirable but must not compromise ventilation.
- Cylinders should not be stored alongside other products, particularly oil, paints, or corrosive liquids.
- Avoid below-ground storage, where possible and where it is unavoidable; consider enclosed space risks.
- Storage areas should be designed to prevent unauthorised entry, protect untrained people from hazards and guard cylinders from theft.
- Different types of gases should be stored separately.
  - Oxygen cylinders must be separated from fuel gas cylinders by a distance greater than 3 meters.
  - LPG cylinders in excess of 50kg total capacity should not be stored within 3 meters of any other cylinders, including acetylene.
- Storage areas must clearly display signage in accordance with the Dangerous Goods regulations, including:
  - Class Diamonds
  - HAZCHEM
  - No smoking and naked flame warning signs
- Full and empty cylinders should be kept separate; all cylinders should be treated as full, regardless of their content.
- Gas cylinders must be stored upright on a firm, level floor and restrained to prevent falling.
- Store cylinders away from heavy traffic and emergency exits.

2.4 Handling of Cylinders

When handling gas cylinders, current manual handling regulations should be followed, and precautions should be taken, including:

- Safety shoes and gloves should be worn when handling cylinders.
- Cylinders should be handled with care and not knocked violently or allowed to fall.
- Never lift a cylinder with magnets, chains or a sling. Use a cradle when lifting by crane.
- Do not move cylinders with the cylinder valves open.
- Cylinders should be moved with the appropriate size and type of trolley for manual handling and should incorporate a heat shield in the event of close proximity between the fuel gas and oxygen cylinder.
- Cylinder valves must be closed when moving cylinders and equipment detached.
- Never roll cylinders along the ground; this may damage the identification labels and/or cause the valve to open accidentally.

Follow all safety, storage and handling precautions recommended by the gas cylinder manufacturer.

2.5 Use of Cylinders

Cylinders must always be used in accordance with the manufacturer's instructions and recommendations. The following precautions must be followed:

- Never "crack" a fuel gas cylinder valve near any ignition source.
- Valves or regulators that are damaged, or suspected to be damaged, must not be used until they have been inspected by a qualified service agent or technician.
- Cylinders must never be used as rollers or supports to move other objects.
- Acetylene and LPG cylinders must always be kept in a vertical or near-vertical position, whether in use or empty.
- Acetylene must never be used at a pressure above 150 kPa. Pressures beyond this limit can lead to gas instability and explosion.
- Cylinder valves must only be opened using approved hand wheels or keys. Do not use excessive force or extension bars to open or close valves.
- Acetylene cylinder valves should not be opened more than one and a half turns; one turn is recommended to allow quick shut-off in an emergency.
- Empty cylinders must have the valve fully closed, protective caps fitted, and be clearly marked, for example, with "MT" written in chalk.

2.6 Transport of Cylinders

When transporting gas cylinders, all requirements under the ADG Code and other applicable regulatory guidelines must be followed. Sensible precautions must be taken to ensure safe transport at all times.

- Use open vehicles wherever possible.
- If closed vans or cars must be used, ensure they are properly ventilated at all times.
- Make sure all cylinder valves are fully closed and check for leaks before transport.
- Cylinders must be securely restrained to prevent any movement during transit.
- Do not allow any part of a cylinder to protrude from the vehicle. This includes never carrying cylinders horizontally across forklift tines.
- Disconnect all equipment, such as pressure regulators, from cylinders before transport.
- Do not use cylinders inside a closed vehicle.
- Acetylene and LPG cylinders must always be transported upright, even when empty. This ensures the cylinder's internal safety devices remain in contact with vapour, not liquid.

2.7 Flame Properties of the Fuel Gases

Each fuel gas has a unique carbon-to-hydrogen ratio, which determines the amount of oxygen required for efficient combustion. This fuel-to-oxidant ratio impacts the flame temperature, as well as the flammability and explosive limits of the gas.

The oxy-acetylene flame, when mixed at a 1:1.1 fuel-to-oxygen ratio, achieves the highest flame temperature (3,160°C) with the least amount of oxygen of all fuel gases. Increasing the oxygen ratio reduces the flame temperature while increasing oxidation caused by the gas mixture.

LPG is a by-product of crude oil refinement and is made up of several gases like methane, butane and propane. The ratios of these gases can vary, altering the flame properties between different suppliers. Propane flames can reach temperatures of up to 2,840°C but require a higher fuel-to-oxygen ratio of 1:3.75.

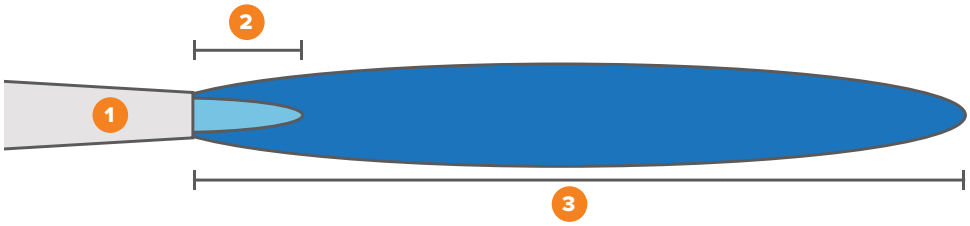

1	Nozzle
2	Primary flame (or inner cone)
3	Secondary flame (or outer cone)

	Acetylene (C_2H_2)	LPG (C_3H_8)
Ratio of fuel to oxygen	1:1.1	1:3.75
Maximum flame temperature	3,160°C	2,840°C
Heat distribution in primary flame (kJ/m3)	18,890	10,433
Heat distribution in secondary flame (kJ/m3)	35,882	85,325

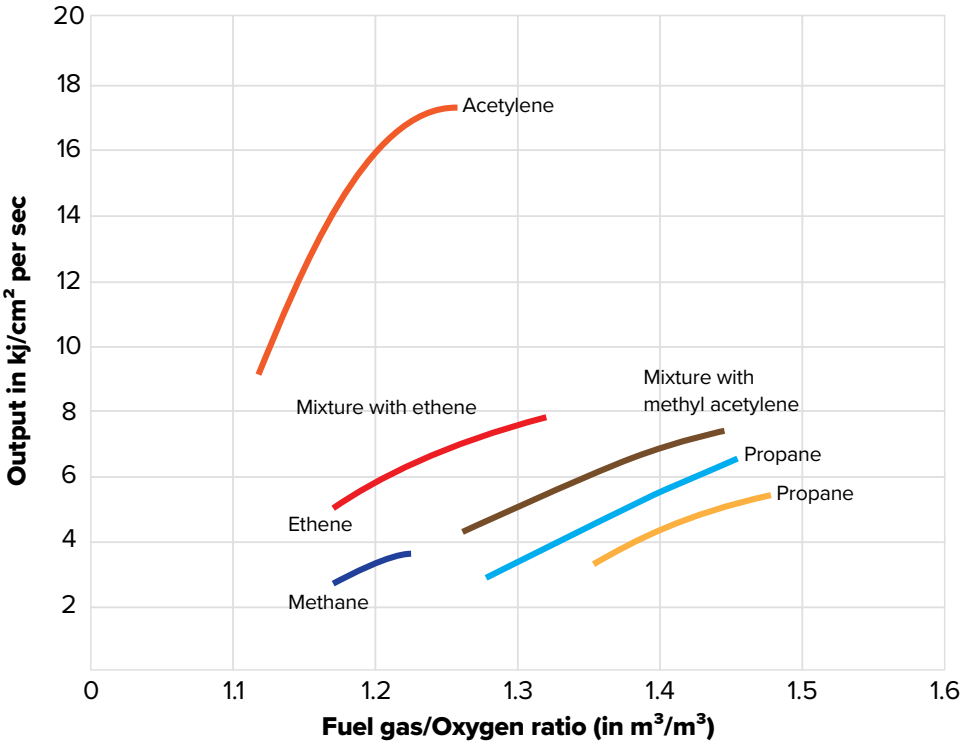

2.8 Applications

Process	Acetylene	LPG	Notes
Cutting	Yes	Yes	The choice to oxy-cut depends on the material thickness, equipment used, and operator preference.
Brazing*	Yes	Yes	Acetylene is recommended for brazing due to its higher primary flame heat.
Heating*	Yes	Yes	The material thickness, equipment, and operator preference are factors, but LPG is primarily used because of its higher secondary flame heat.
Welding	Yes	No	LPG is unsuitable for welding due to its low flame temperature and high water combustion.
Flame gouging	Yes	Yes	Acetylene is recommended for flame gouging because of its high primary flame temperature and heat.
Straightening/Bending	Yes	Yes	The material thickness, equipment, and operator preference are factors, but LPG is often used for its higher secondary flame heat.
Cleaning	Yes	Yes	The material thickness, equipment, and operator preference are factors, acetylene is typically used for its localised heat, which effectively cleans steel surfaces.
Spot heating	Yes	Yes	Acetylene is recommended for spot heating because of its higher primary flame heat.
Thermal spraying materials	Yes	Yes	Acetylene is recommended for thermal spraying due to its higher flame temperature.
Case hardening	Yes	Yes	Acetylene is recommended for case hardening because it adds carbon into the surface of the material.

**Fuel gas can be used with oxygen or air*

3. Package Contents

Pipe Gas Cutting Machine	**Gas Distributor**
Cutting Torch with Rack Mount	**Chain x 2.4m**
Torch Holder	**Tool Kit (screw driver & flint lighter)**
Torch Holder Connector	**Power Lead**
Gear Bar 200mm	**Operating Manual**
Hose Set 600mm	
Type 41 Acetylene High Speed Cutting Nozzle Size 8 (U11393)	
Type 41 Acetylene High Speed Cutting Nozzle Size 12 (U11394)	
Type 41 Acetylene High Speed Cutting Nozzle Size 15 (U11395)	

4. Technical Specifications

4.1 Machine Specifications

Technical Data

Parameter	Values
SKU	U11466
Primary Input Voltage	240V Single-Phase 50/60Hz
Drive System	Manual
Warranty (Years)	1 Year

Size & Weight

Parameter	Values
Dimensions (mm)	410x210x410mm
Wheel Width (mm)	210
Weight (kg)	8.5kg

Cutting Specifications

Parameter	Values
Effective Pipe Cutting Diameter (mm)	108-600 (on 2.4m chain)
Pipe Material Thickness (mm)	<50
Cutting Shape	I-Shape Cutting V-Bevel Cutting (up to 45°)
Range of Vertical Torch Movement (mm)	50
Range of Horizontal Torch Movement (mm)	100
Nozzle Type	Type 41 (High-Speed)

5. Machine Layout

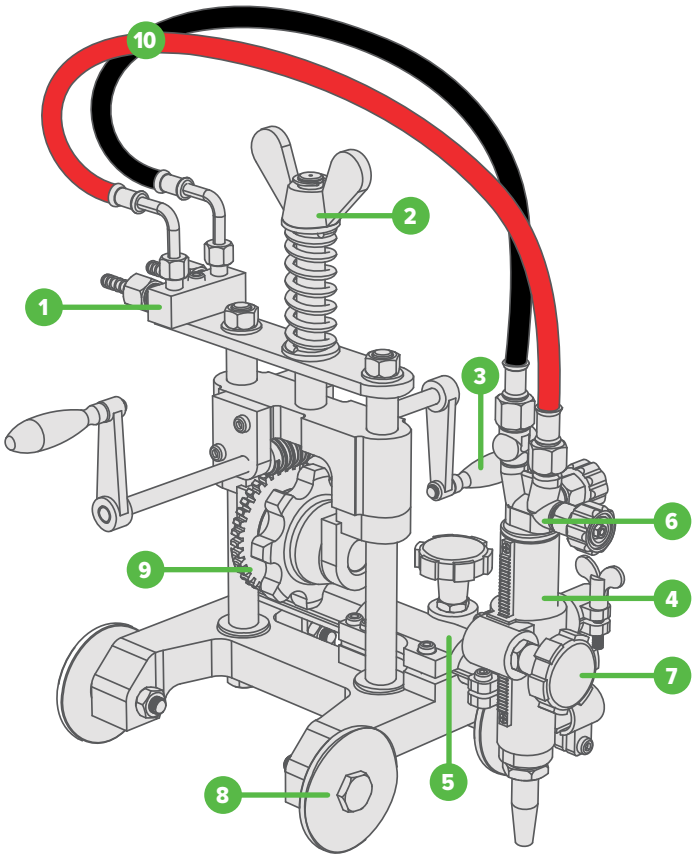

1. Gas Distributor
2. Wing Nut
3. Handle
4. Torch Rack Handle
5. Lateral Bar
6. Torch
7. Up/Down handle
8. Wheel
9. Sprocket
10. Gas Tubes

6. Installation

6.1 Assembling the Machine

1. Slide the handles into the handle slots. Lock them into place with the circlips, using pliers to tighten them down.

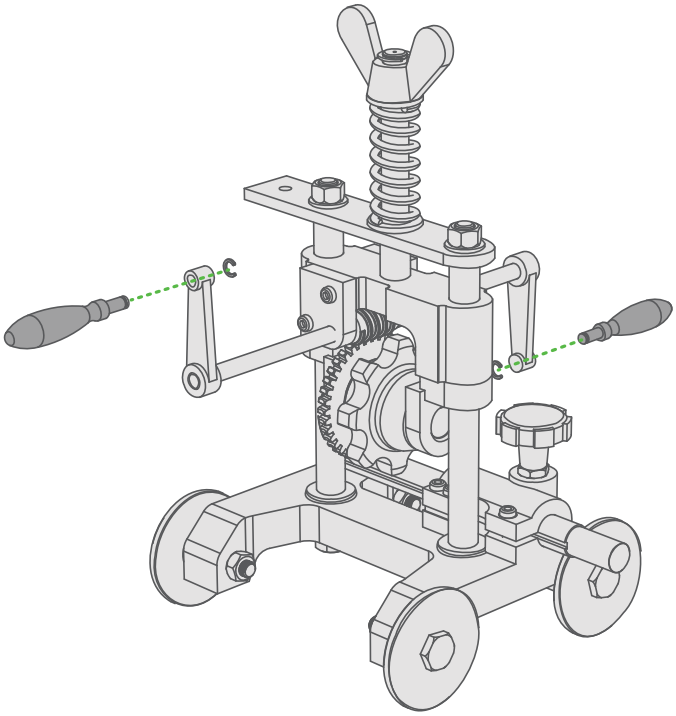

2. Screw the torch holder connector onto the lateral bar.

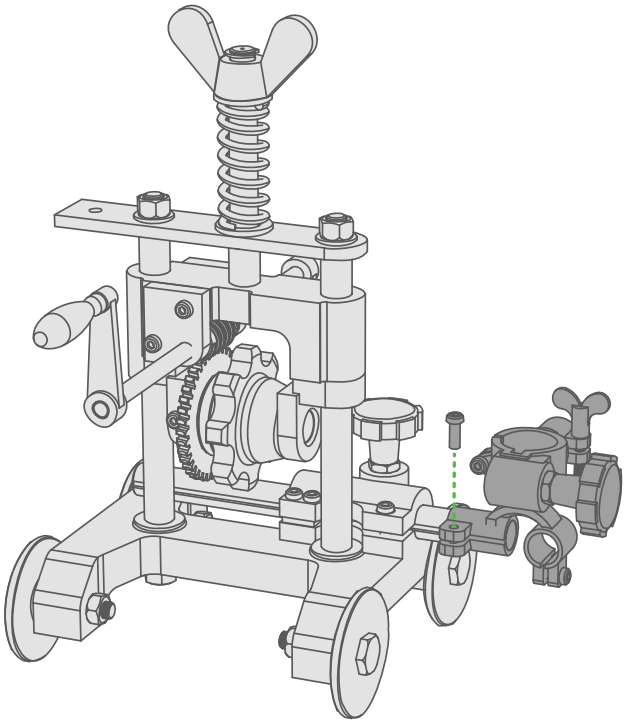

3. Insert the torch into the torch holder connector and tighten it securely.

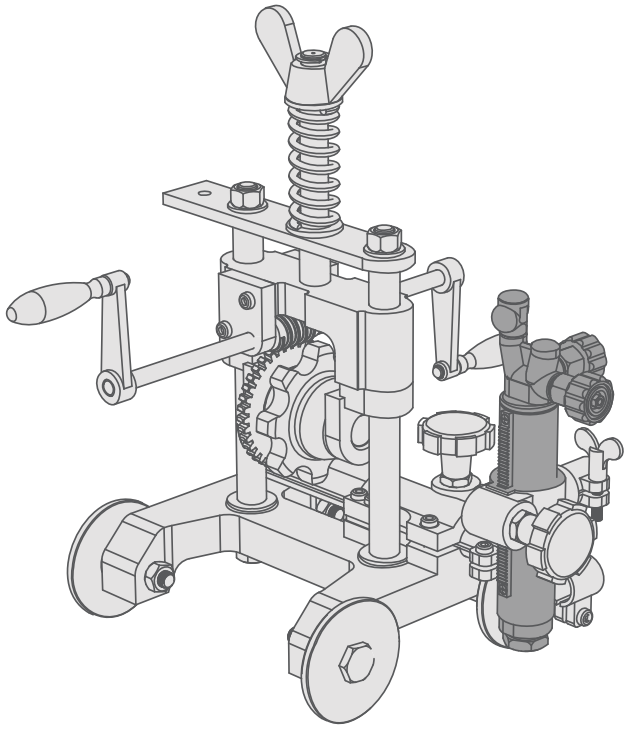

4. Undo the screw on the long side of the bar beside the wing nut. Use this screw to screw the gas distributor in place.

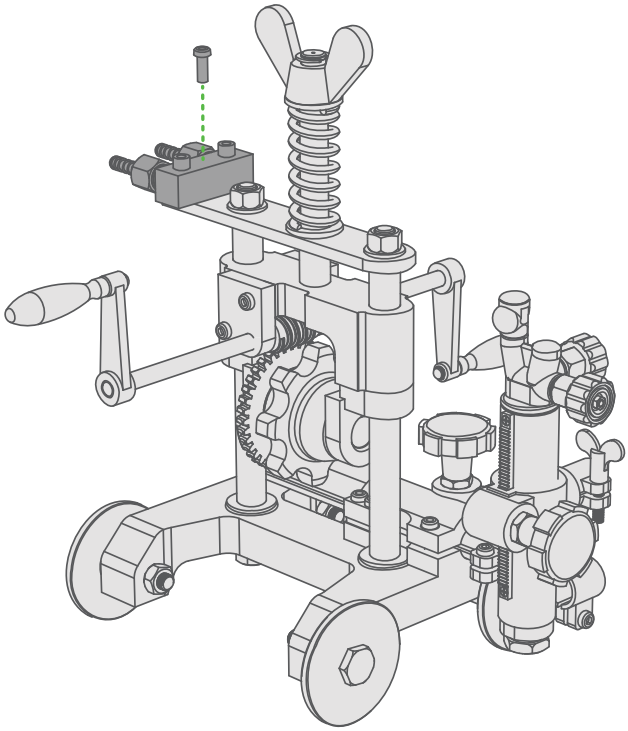

5. Connect the gas hoses to the gas distributor and the torch.

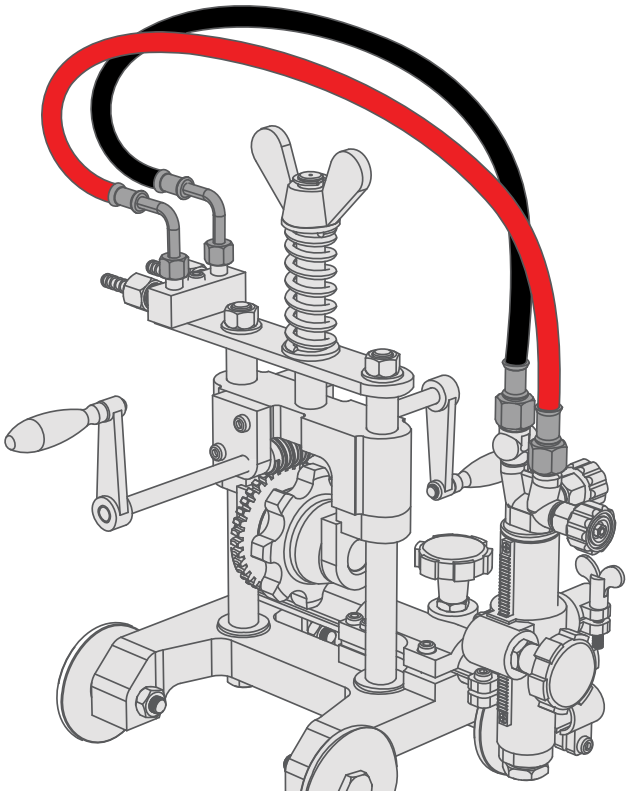

The blue oxygen hose is a right-hand thread, and the red fuel gas hose is a left-hand thread.

6. Unscrew the retaining from the end of the torch and slide the cutting nozzle into the torch.

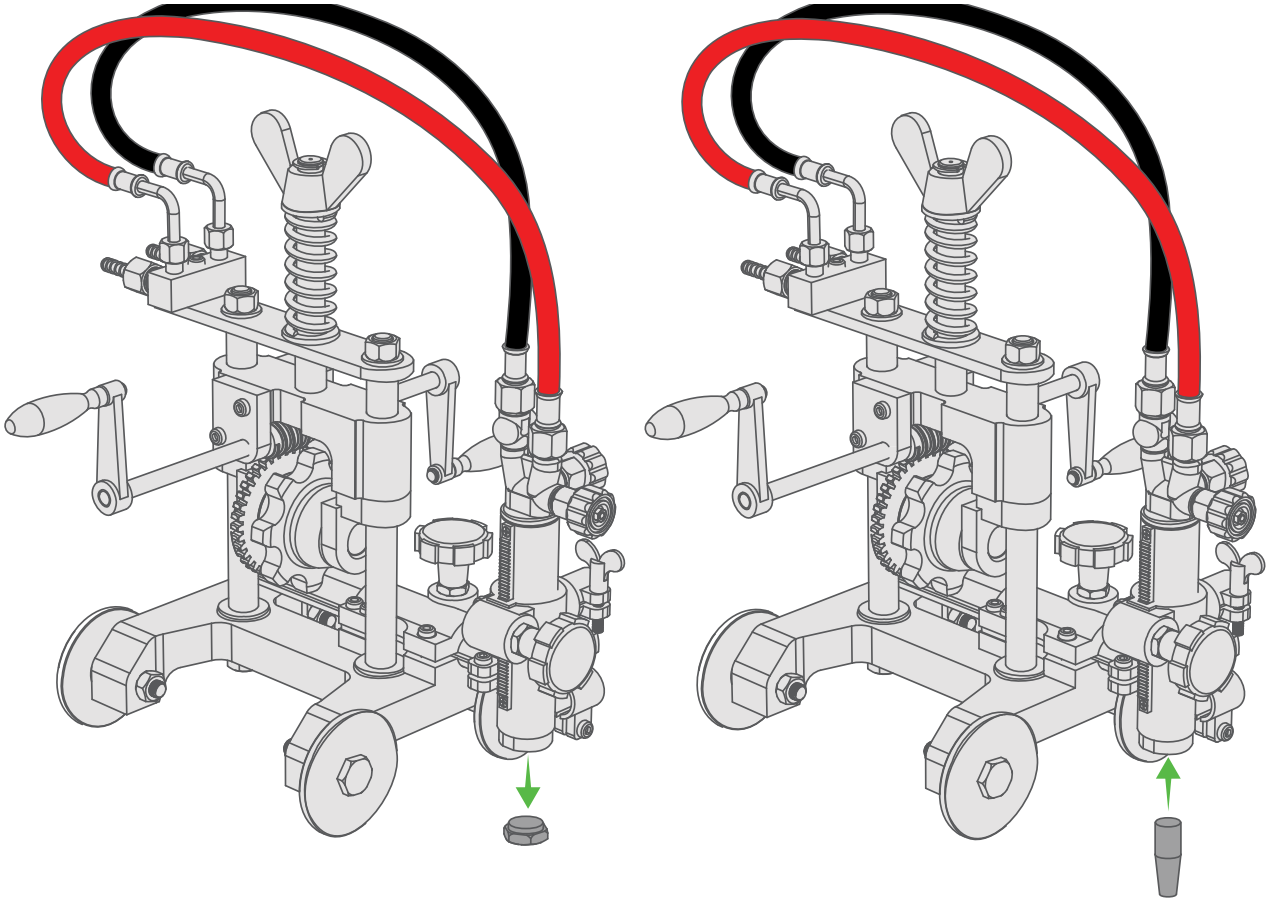

7. Screw the retaining nut in to hold the nozzle in place. *See "8. Cutting Data" on page 36* for the recommended nozzle size based on the material thickness.

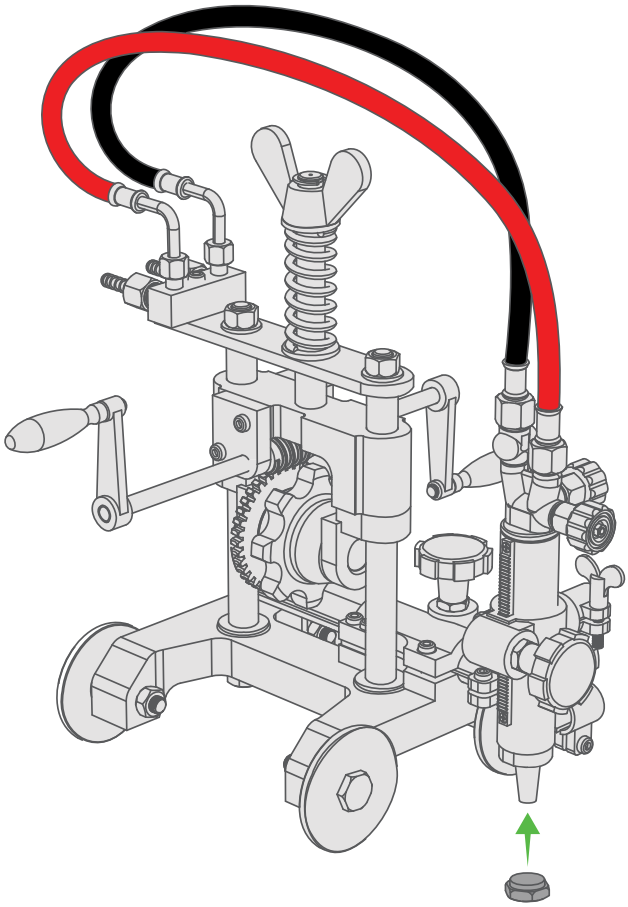

For heavily rusted pipes or bevel cutting angles greater than 20°, use a tip one size larger.

Use two spanners when tightening the nozzle onto the torch to prevent damage to the torch.

6.2 Checking for Gas Leaks

1. Screw out (anticlockwise) the regulation screw on the regulator until it is fully disengaged.
2. Ensure the valves on the straight line cutter are all closed.
3. Stand to the side of the gas cylinder and slowly open it.

Opening the gas cylinder quickly releases a surge of pressure against the internal components of the regulator, which can cause damage.

4. Set the regulator to roughly 100 kPa by turning the regulation screw clockwise.
5. Close the gas cylinder valve.
6. Turn the regulation screw anticlockwise one turn.

If the pressure registered by the regulator gauges doesn't change, there are no leaks.

If the pressure registered by the cylinder contents (high pressure) gauge drops, there is a leak in the cylinder valve, inlet fitting or the cylinder contents gauge.

If the pressure registered by the gas flow (low pressure) gauge drops, there is a leak in the downstream equipment, hose, hose fitting, outlet fitting or delivery gauge.

If the cylinder contents gauge drops and the gas flow gauge rises at the same time, there is a leak in the internal regulator seat.

If there is a leak, its exact location can be found by applying a leak testing solution (e.g. dishwashing liquid mixed with water) to the connection joints. The solution will bubble or produce suds if there is a gas leak.

Test both gas cylinders (oxygen and acetylene/LPG) for gas leaks.

Never use flames to locate gas leaks.

6.3 Adjusting the Chain Length

The length of chain needed is determined by the size of the pipe. To work out the number of chain links, use the following formula:

Y = OD + 12

- **Y** = Number of chain links
- **OD** = Outer diameter of the pipe in centimetres (round any millimetre measurement up to the next whole centimetre)

For example:

For a pipe outside diameter of 132mm:

- 132mm = 13.2cm → round up to 14cm
- Y = 14 + 12
- Y = 26

Therefore, 26 chain links are required to cut a pipe with a 132mm outer diameter.

6.4 Attaching the Machine to the Pipe

1. Calculate the required number of chain links based on the pipe's outside diameter.
2. Position the machine on the pipe that's being cut, then turn the chain tension wing nut anticlockwise to lower the slide bracket.
3. Attach the chain by engaging it with the sprocket and securing it around the pipe in the correct orientation.

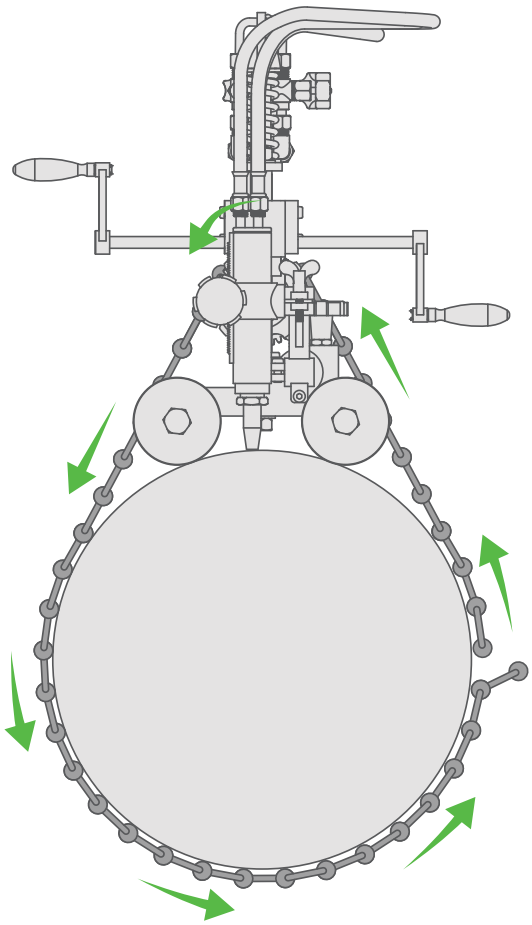

Ensure the correct side of the chain is facing outwards to prevent misalignment.

4. Connect both ends of the chain to secure the machine in place.

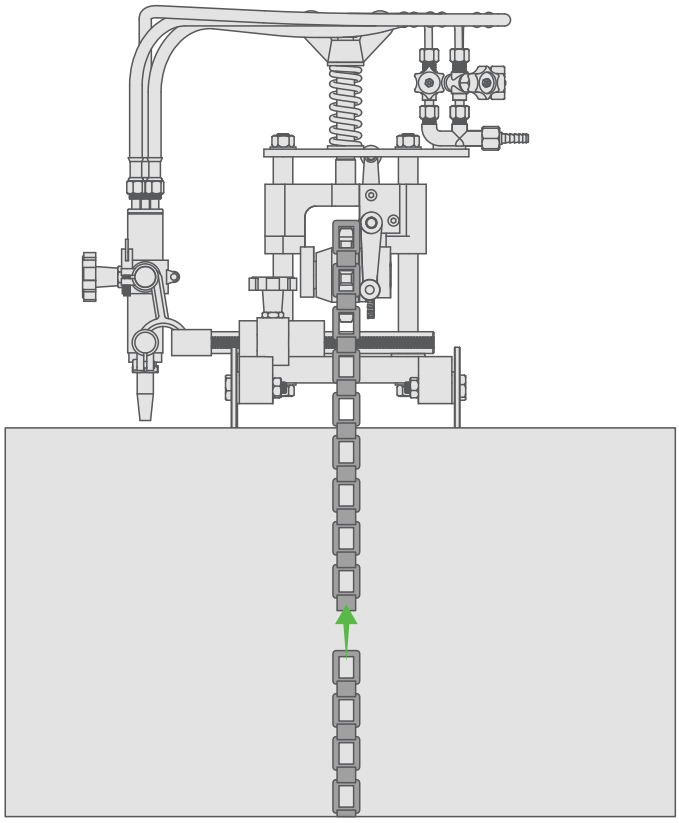

5. Fix the machine to the pipe by turning the chain tension wing nut clockwise. Avoid overtightening the spring, leaving a 1-2mm clearance for it. Adjust the torch height by turning the torch height knob on the side of the torch holder.

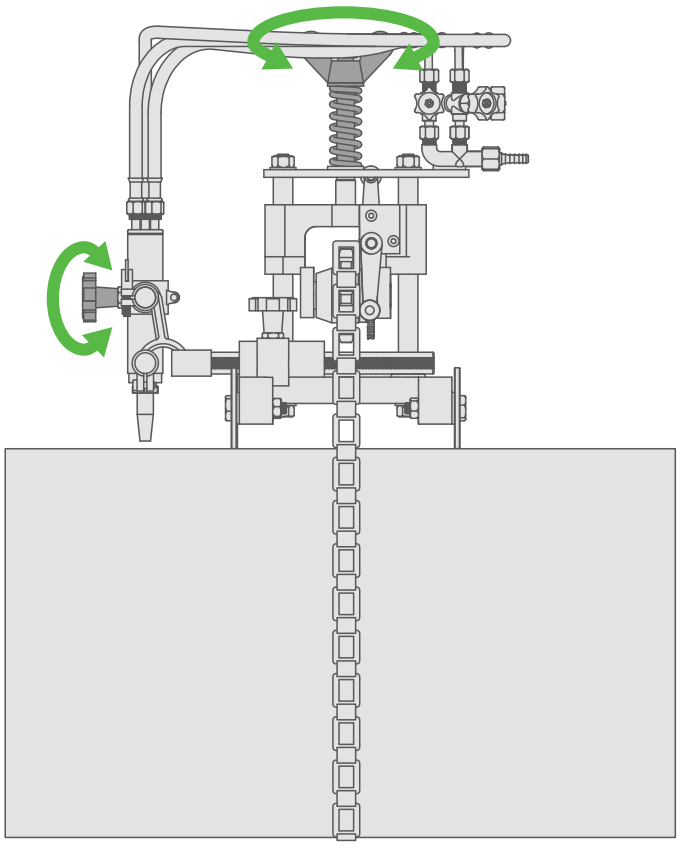

6. Adjust the chain tension. Hold the machine by hand, disengage the clutch, and gently push it left and right within a range of about 120°, repeating two or three times to tension the chain gradually. Once the chain has been tensioned, re-engage the clutch.

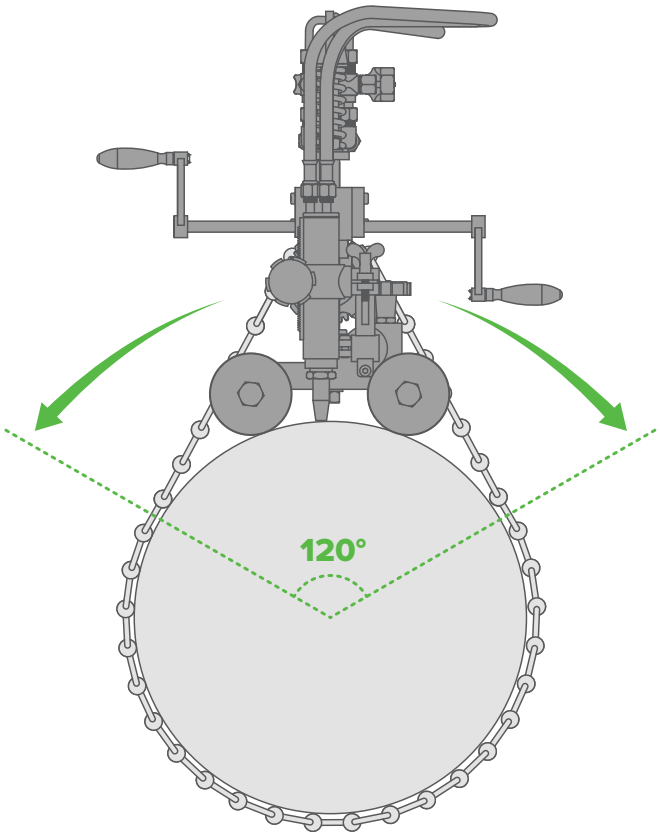

7. Perform a final check and move the machine around the entire pipe circumference to confirm that the gas hose length is adequate and that the nozzle returns to its original position.

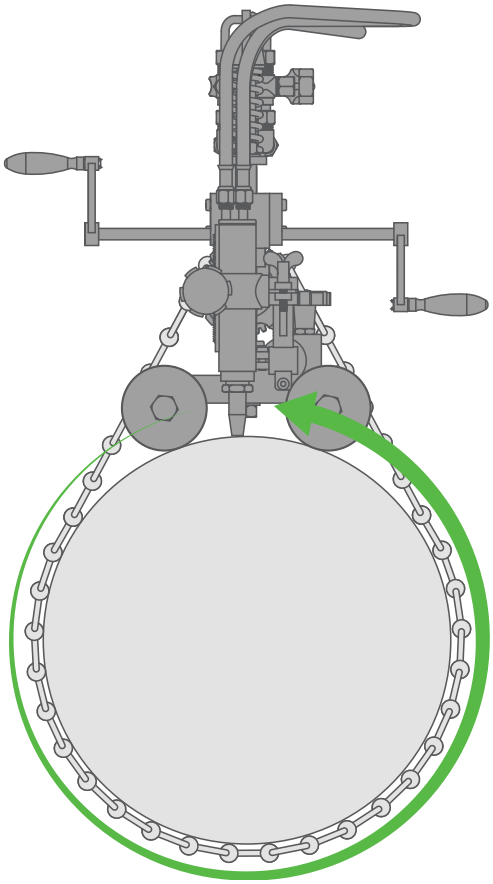

7. Operation

7.1 Preparing for Operation

Before using the equipment, ensure that all the necessary installation actions have been completed according to your equipment setup and instructions.

Always check before use that the chain, machine case and gas hoses are in serviceable condition. Ensure that the connectors are correctly fastened. Loose connectors can impair performance and damage connectors.

7.2 Running the Pipe Cutter

7.2.1 Igniting the Torch

1. Ensure the torch valves are closed before beginning.
2. Adjust the gas pressure and cutting speed to suit the plate thickness. *See "8. Cutting Data" on page 36* for recommended gas pressures and cutting speeds.
3. Open the fuel gas valve on the machine torch by ¼ to ½ a turn and ignite the torch with a flint lighter.

Do not use cigarette lighters or matches.

4. Adjust the fuel gas valve until the flame just stops smoking.
5. Open the preheat oxygen valve on the machine torch until a neutral flame is produced.
6. Completely open the cutting oxygen valve and readjust the preheat oxygen valve to restore the neutral flame if necessary.

If the cutting oxygen flow is uneven, it will negatively impact the cut quality. If this happens, close the fuel and preheat oxygen valves and clean the nozzle with an appropriate nozzle cleaner while allowing the cutting oxygen to flow.

A neutral flame is used to ensure a smooth, high-quality cut surface.

An oxidising flame may be used for bevel cutting but can cause slag buildup or melting at the plate edge. An excessive cutting oxygen pressure may cause similar defects.

7.2.2 Cutting the Pipe

There are several ways a cut can be started on pipe:

- Cutting in from the edge
- Piercing the pipe
- Drilling a hole before cutting

To pierce the pipe with the pipe cutting machine:

1. Ignite the torch and adjust the flame as per “Igniting the Torch” instructions.
2. Preheat the cutting start point thoroughly until it is white hot.
3. Open the cutting oxygen valve to pierce the pipe.

To begin cutting:

1. Position the cutting nozzle so that it is aligned with the cutting start point.
2. Set the height of the nozzle from the plate. It should sit 15-20mm from the surface to prevent slag from splashing onto it.
3. Ignite the torch and adjust the flame as per “Igniting the Torch” instructions.
4. Preheat the cutting start point thoroughly until it is white hot.
5. Open the cutting oxygen valve and turn the handle at the same time to begin cutting.
6. While cutting, hold the chain tension wing nut to support the machine as it moves around the pipe.
7. When the cut is finished, stop turning the handle, close the cutting oxygen valve, close the fuel gas valve and close the preheat oxygen.

The cutting speeds listed in the Cutting Data are recommendations only. If needed, adjust the speed of the machine for the optimal cut quality.

7.2.3 Moving the Cutter

Never move the machine when the preheat flame is on.

Always remove the machine from the chain before moving it. The machine case is made mainly from aluminium alloy for lightness, so shocks and impacts can damage it. Take care not to drop the machine when moving it.

7.3 Shutting Down

Always close the cylinder valve when the regulator is not in use. For shutdowns lasting longer than 30 minutes, follow these steps:

1. Close the gas cylinder or upstream valve.
2. Open downstream equipment valves to purge the lines, directing the gas to a well-ventilated area and away from ignition sources.
3. Once the gas is fully vented, turn the regulation screw to its closed position (anticlockwise).
4. Close the valves on the downstream equipment.

8. Cutting Data

8.1 Oxy-Acetylene

Type 41 High-Speed Cutting Nozzle Size	Steel Thickness (mm)	Acetylene Pressure (kPa)	Oxygen Pressure (kPa)	Cutting Speed (mm/min)	Acetylene Gas Flow (L/min)	Oxygen Gas Flow (L/min)
6	6-8	100	650	700	6	31
8	8-20	100	650	550-700	6	50
12	25-75	100	650	300-500	10	107
15	75-150	100	650	200-300	12	158
20	150-250	100	650	100-200	13	250
24	250-300	100	650	90	18	320

8.2 Oxy-LPG

Type 44 High-Speed Cutting Nozzle Size	Steel Thickness (mm)	LPG Pressure (kPa)	Oxygen Pressure (kPa)	Cutting Speed (mm/min)	LPG Gas Flow (L/min)	Oxygen Gas Flow (L/min)
6	6-8	100	650	550	5	45
8	8-20	100	650	500-550	5	64
12	25-75	100	650	300-500	6.5	122
15	75-150	100	650	200-300	7	173
20	150-250	100	650	100-200	8	267
24	250-300	100	650	90	12	350

The preheat oxygen pressure for all high-speed nozzles is 200 kPa.

The cutting speeds are average values based on drop cuts on clean plates using nozzles in good condition. They are intended to act as a guide only. Individual results may vary depending on the working conditions.

9. Maintenance

Inspection and maintenance should be carried out on a routine basis for all items of gas and cutting equipment.

How often the gas equipment is used and the working environment it is in should both be considered when planning the frequency of maintenance. In severe conditions, maintenance should occur more frequently.

Proper operation of the equipment and regular preventive maintenance will help avoid failure, increase the life-span and ensure problem-free use.

Unplug the gas equipment from the cylinders before beginning any maintenance.

Before each use, check your gas hoses, regulators, valves and cylinders are in good condition. Check that all connections are properly fastened. Any loose connections can inhibit performance and cause damage.

- Check that all covers and components are intact.
- Clean any oxidised connections and tighten them.
- Check for gas leaks on all regulators, valves and cylinders each time the equipment is set up.
- Check for 'creep' on regulators.

To check for 'creep' (pressure build up when the blowpipe valves are closed), close the blowpipe valves while the regulator is open and check for a continuing increase in pressure beyond the pressure that has been set. A pressure build up above 35 kPa is excessive.

- Check the pressure gauges or indicators return to the stop position when the pressure is released.
- Check the regulator pressure indicator accuracy annually.
- Clean dirt and debris from the cutting nozzles.

Drills should not be used to clean welding tips or cutting nozzles as any damage may promote the occurrence of flashback.

- Check safety devices strictly according to the requirements in AS 4603.
- Check all O-rings for signs of damage regularly.

Only authorised service repair agents should carry out repairs and internal servicing.

For repairs, contact UNIMIG at unimig.com.au or contact your local dealer.

10. Troubleshooting

10.1 Gas Cutting Troubleshooting

Problem	Recommended Actions
The base widens with excessive kerf	• Decrease the oxygen pressure. • Increase the travel speed.
The top edge melts or rounds	• Increase the travel speed. • The nozzle tip is too close to the plate, raise it. • The preheat flame is too large, reduce it. - Decrease the oxygen pressure.
Lack of penetration	• Decrease the travel speed.
Undercut	• The nozzle tip is too high above the plate, lower it.

10.2 Pipe Cutting Machine Troubleshooting

Problem	Recommended Actions
The machine doesn’t run	• The chain tension is too tight. • The worm gear is worn. • The wheel doesn’t rotate.
The cutting surface is rough	• The cutting nozzle is damaged. • The gas pressure or cutting speed is not suitable.

11. Gas Cutting Guide

What Is Gas Cutting?

Gas cutting, most commonly referred to as oxy-cutting, is a method of cutting through ferrous metals using gas to produce a flame. It uses a mixture of oxygen and a fuel gas, generally acetylene or LPG, to rapidly oxidise the metal and cut through it.

Oxy-cutting only works on metal that contains iron because the cutting is done by oxidisation. The metal must be preheated before it is cut, which is done using the same torch.

How Gas Cutting Works

Gas cutting works by using a combination of a preheating flame and a high-pressure stream of oxygen to oxidise and remove metal from the workpiece.

First, a flame, created by burning a fuel gas (commonly acetylene, LPG, or propane) mixed with oxygen, is used to preheat a localised area on the metal's surface to its ignition temperature. For steel, this is approximately 700-900°C, or a bright cherry red. This preheating flame softens the metal but does not melt it.

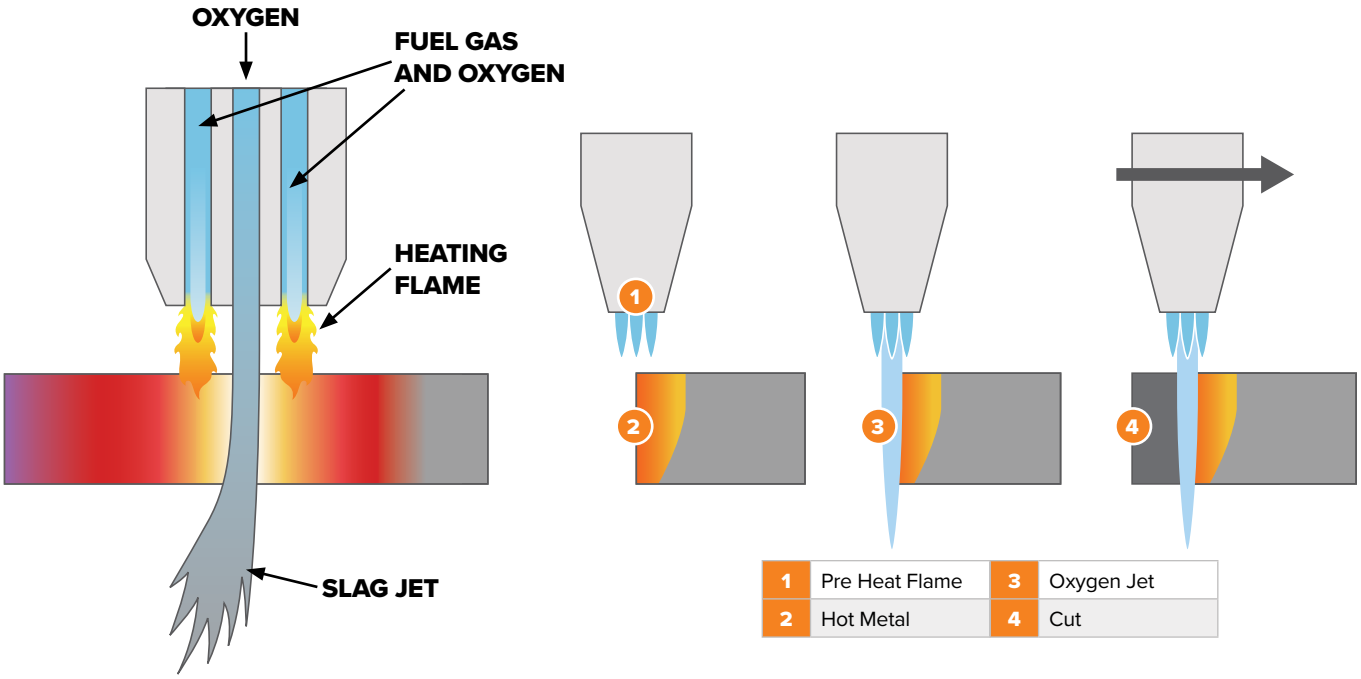

Once the metal is preheated, the lever on the cutting attachment is pressed, releasing a high-pressure jet of pure oxygen onto the heated area. The oxygen reacts with the hot steel in an exothermic oxidation reaction, forming iron oxide (slag) and generating additional heat.

The oxidation reaction (burning of iron) creates molten iron oxide (slag), which is blown away by the high-pressure oxygen jet, creating a cut through the metal. If the oxygen jet is not powerful enough, or if the torch moves too quickly, the slag may solidify in the cut, preventing a successful cut.

As the torch progresses along the cut line, more steel is continuously preheated, and the oxygen jet reacts with the steel, burning it away and creating the cut.

Preheat Flame

The preheat flame is created by the combustion of the preheat oxygen and fuel gas, which are combined either in the torch or the nozzle. The preheat flame serves three main purposes:

- Raises the metal to its ignition temperature.
- Compensates for heat losses caused by conduction into the bulk metal.
- Shields the cutting oxygen from atmospheric contamination, which could affect its performance.

While the ignition temperature varies depending on the material being cut, the choice of fuel gas significantly influences how quickly the material reaches this temperature. For example, oxy-acetylene burns at a higher flame temperature (3,160°C) compared to oxy-propane (2,828°C). As a result, cutting can begin sooner when using oxy-acetylene, especially with thicker materials, where the difference becomes more pronounced.

The purity of the cutting oxygen is critical for efficient cutting. The preheat flame acts as a barrier, preventing nitrogen from the surrounding atmosphere from mixing with the cutting oxygen. If nitrogen reacts with the oxygen, it forms oxides of nitrogen, which can reduce cutting speeds and increase oxygen consumption.

Gas Cutting Attachment & Nozzles

The cutting torch assembly consists of three main parts: the blowpipe handle, the cutting attachment, and the cutting nozzle.

The blowpipe handle is the same as that used for gas welding, with separate valves to control the flow of acetylene and oxygen into the cutting attachment.

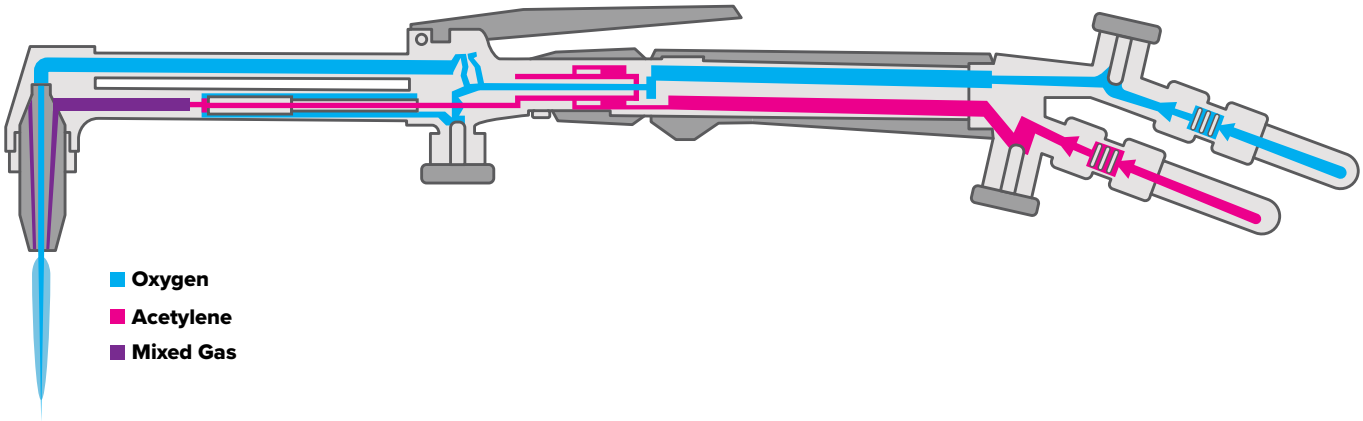

The cutting attachment directs the preheat flame, formed by a mixture of oxygen and acetylene or LPG, which travels through a separate passage to the cutting oxygen.

The cutting oxygen is controlled by a lever located on top of the cutting attachment. When this lever is pressed, a high-pressure stream of oxygen flows through the cutting nozzle and onto the heated metal, initiating the cutting action.

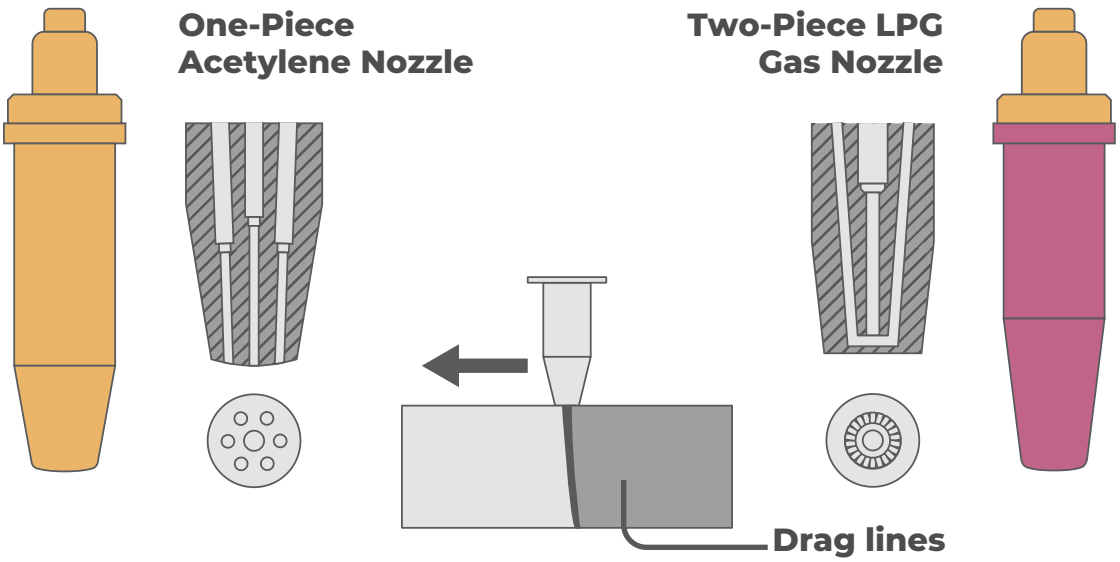

Oxy-Acetylene Cutting Thicknesses

Type 41 Cutting Nozzle Size	Steel Thickness (mm)	Acetylene Pressure (kPa)	Oxygen Pressure (kPa)	Cutting Speed (mm/min)	Acetylene Gas Flow (L/min)	Oxygen Gas Flow (L/min)
6	1-5	100	180	450	2	11
8	6-10	100	200	450	3	19
12	12-20	100	220	350	4	40
15	25-40	100	250	300	6	60
15	50-80	100	350	220	7	90
20	100-125	100	400	150	10	150
24	150-200	100	500	120	13	220
32	200-300	100	600	90	45	420

Oxy-LPG Cutting Thicknesses

Type 44 Cutting Nozzle Size	Steel Thickness (mm)	LPG Pressure (kPa)	Oxygen Pressure (kPa)	Cutting Speed (mm/min)	LPG Gas Flow (L/min)	Oxygen Gas Flow (L/min)
6	3-6	100	200	450	2	18
8	6-10	100	200	400	3.5	30
12	10-20	100	250	360	4.5	58
15	20-40	100	350	300	5.5	81
15	40-80	100	400	270	6	110
20	80-125	100	400	170	6.5	171
24	125-200	100	500	140	9	256
32	200-300	100	600	100	14	450

Metal Preparation

Before a cut can be made, the base material needs to be clean of dirt, rust, paint, oil, grease or millscale. These can be removed using a wire brush or grinder.

Travel Angle & Distance

The inner cone of the preheating flame should be held 3-5mm above the edge of the plate until it is a bright cherry red colour.

If the nozzle is held too low, it can burn the top corners of the cut. The top edge becomes slightly rounded and heavily beaded. The cut face remains fairly square, with a relatively sharp bottom corner. When the nozzle is too low, it can hinder the oxidation reaction, producing a cut that looks like it was done too slowly.

If the nozzle is held too high, heat spreads along both sides of the cut, causing excessive melting and rounding at the top edge. it can result in undercut on the top side as it widens and ‘bell-outs’, and in extreme cases won’t penetrate all the way through the metal.

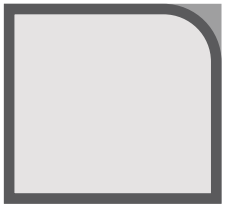

TOO LOW

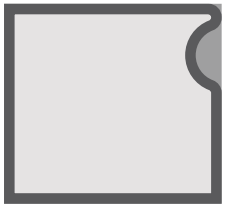

TOO HIGH

The gas nozzle should be held perpendicular (90°) to the base plate or inclined slighty forward in the direction of travel and pushed along the cut.

Where possible, the cut should be started on the edge of the plate. If this isn’t possible, the cut can be started by piercing the plate.

Travel Speed

Travel speed is the rate that the torch is moved along the cut, and is determined by the material thickness being cut, as thicker materials require slower cutting speeds to ensure proper penetration.

If the travel speed is too slow, the top edges will be rounded and melted, while the lower half of the cut will be deeply fluted or badly gouged due to the molten steel scouring the cut surface. Hot metal and slag accumulate on the underside, and what remains on the bottom of the cut will be difficult to remove. These conditions can also be caused by too low an oxygen pressure.

If the travel speed is too fast, the top side of the cut may lack sharpness and be bearded, or it can be left with undercut. The excessive backward drag of the cut can also prevent it from penetrating all the way through the joint.

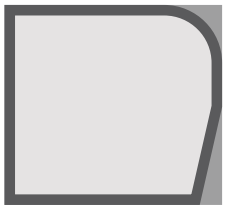

TOO SLOW

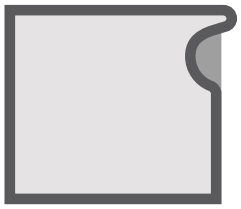

TOO FAST

Backfire & Flashback

Backfires and flashbacks are combustion-related issues that can occur when gas cutting.

A backfire occurs when the flame momentarily burns back into the torch nozzle with a popping sound but goes out almost immediately.

A flashback is a more serious problem where the flame travels back through the torch and burns continuously, making a soft, hissing sound.

These can occur due to one or more of the following reasons:

1. The gas flow does not match the size of the nozzle being used.
2. The nozzle is overheating, which can happen from cutting too close to the metal or for prolonged periods.
3. Particles of carbon or metal can become lodged inside the nozzle and cause blockages.
4. The nozzle or torch is damaged.

If a flashback occurs while cutting, shut the valves off immediately, in this order:

Preheat Oxygen → Fuel Gas → Cutting Oxygen

Whether a backfire or flashback has occurred, the cause needs to be identified and action taken to rectify it before the machine is used again.

12. Gas Processes & Features Glossary

B

Backfire - The sudden return of the flame into the blowpipe, usually with a popping sound. The flame may be extinguished or re-ignite at the nozzle.

C

Carburising Flame - A carburising (or reducing) flame is produced when the acetylene content in the mixture is higher than the oxygen content.

F

Flashback - A severe condition where the flame travels back through the blowpipe and into the hoses, potentially reaching the regulators or even the gas cylinder. This can cause dangerous heating and decomposition of the gas contents.

G

Gas Cutting - A method of cutting through ferrous metals using gas to produce a flame. It uses a mixture of oxygen and a fuel gas, generally acetylene or LPG, to rapidly oxidise the metal and cut through it.

N

Neutral Flame - A neutral flame is produced when the ratio of oxygen to acetylene in the mixture leaving the torch is approximately one-to-one and it has no chemical effect on the metal.

O

Oxidising Flame - An oxidising flame is produced when the oxygen content in the mixture exceeds the acetylene content.

P

Preheat Flame - The preheat flame is created by the combustion of the preheat oxygen and fuel gasand used to raise the metal to its ignition temperature, compensate for heat loses and shield the cutting oxygen from atmospheric contamination.

S

Sustained Backfire - A sustained backfire occurs when the flame continues to burn inside the neck or handle of the blowpipe. It begins with a popping sound, followed by a hissing noise caused by internal burning.

UNIMIG

100% AUSTRALIAN OWNED

unimig.com

@UNIMIG