UNIMIG ENVY



OMNI 220 AC/DC

U11596 | Operating Manual

Contents

1. Safety **4**

2. Input Power Requirements **8**

2.1 Circuit Breaker Recommendation 9

2.2 Welding Cable Leads Recommendation 9

2.3 Extension Cord Data 10

2.4 Generator Power Data 10

3. Package Contents **11**

4. Technical Specifications **12**

4.1 Machine Specifications 12

4.2 Duty Cycle & Overheating 13

4.3 Pinout 14

4.4 Equipment Identification 14

5. Machine Overview **15**

5.1 Key Features 15

5.2 MIG Features 15

5.3 TIG Features 16

5.4 MMA Features 17

5.5 Plasma Features 17

5.6 Machine Layout 18

6. Installation **20**

6.1 Installing the Handles 20

6.2 Installing the Torch Holder (optional) 22

6.3 Connecting the MIG Torch 23

6.4 Connecting a Spool Gun 24

6.5 Connecting a Push-Pull Gun 24

6.6 Assembling a T2 TIG Torch 25

6.7 Swapping the TIG Torch Module 28

6.8 Connecting the TIG Torch 30

6.9 Assembling the Plasma Torch 31

6.10 Connecting the Plasma Torch 34

6.11 Connecting the MMA Electrode Holder 35

6.12 Connecting the Earth Clamp 36

6.13 Calibrating the Cables 37

6.14 Connecting a Foot Pedal 38

6.14.1 Wired Foot Pedal 38

6.14.2 Wireless Foot Pedal 38

6.15 Installing & Replacing the Drive Rollers 40

6.16 Removing & Installing the Guide Tube 42

6.17 Installing & Replacing the Wire 44

6.17.1 To Install a Wire Spool 44

6.17.2 Adjusting the Spool Hub Brake 47

6.17.3 To Remove the Wire Spool 47

6.17.4 To Install a Wire Spool in the Spool Gun 48

6.17.5 To Feed Wire Through the Push-Pull Gun 52

6.18 Installing & Replacing the Torch Liner 55

6.18.1 Steel Liner 55

6.18.2 Aluminium Liner 58

6.19 Installing the Gas Bottle & Testing the Gas Flow 60

6.19.1 Testing the Gas Flow 61

6.20 Regulator Safety & Operation 62

6.21 Connecting an External Air Compressor 67

6.22 Installing Additional Air Filters 68

6.23 Adjusting the Air Pressure 69

7. Operation **70**

7.1 Preparing for Operation 70

7.2 Control Panel Layout & Operation 71

7.3 MMA Mode 72

7.3.1 Welding Parameters 72

7.3.2 Advanced Welding Parameters 72

7.4 Lift TIG Mode 73

7.4.1 Welding Parameters 73

7.4.2 Advanced Welding Parameters 74

7.5 HF TIG Mode 75

7.5.1 Welding Parameters 75

7.5.2 Advanced Welding Parameters 76

7.6 Smart-Set TIG Mode 78

7.6.1 Welding Parameters 78

7.6.2 Advanced Welding Parameters 79

7.7 Advanced TIG Weld Cycles 81

7.8 Manual MIG Mode 82

7.8.1 Welding Parameters 82

7.8.2 Advanced Welding Parameters 83

7.9 Smart-Set MIG Mode 84

7.9.1 Welding Parameters 84

7.9.2 Advanced Welding Parameters 85

7.10 Pulse MIG Mode 86

7.10.1 Welding Parameters 86

7.10.2 Advanced Welding Parameters 87

7.11 DP (Double Pulse) MIG Mode 88

7.11.1 Welding Parameters 88

7.11.2 Advanced Welding Parameters 89

7.12 Cut Mode 90

7.12.1 Cutting Parameters 90

7.13 Smart-Set Cut Mode 91

7.13.1 Cutting Parameters 91

7.14 Job Menu 92

7.14.1 Saving a Job 92

7.14.2 Overwriting a Job 92

7.14.3 Importing a Job 92

7.14.4 Exporting a Job 92

7.14.5 Deleting a Job 93
7.15 Settings Menu 94
7.15.1 Settings 94
8. Modules & Accessories (optional) 95
8.1 Water Cooler 95
8.1.1 Package Contents 95
8.1.2 Machine Specifications 95
8.1.3 Key Features 95
8.1.4 Water Cooler Layout 96
8.1.5 Welding Coolant 97
8.1.6 Installing the Machine on the Water Cooler 98
8.1.7 Connecting the Water-Cooled MIG Torch 101
8.1.8 Connecting the Water-Cooled Push-Pull Gun 102
8.1.9 Connecting the Water-Cooled TIG Torch 103
8.1.10 Filling the Water Cooler 104
8.1.11 Operation 105
8.1.12 Changing the Coolant 105
8.1.13 Water Cooler Troubleshooting 106
8.1.14 Indicator Lights 106
8.1.15 Error Codes 106
8.2 Welding Trolley 107
8.2.1 Package Contents 107
8.2.2 Assembly 108
8.2.3 Installing the Machine on the Trolley 116
8.2.4 Installing the Water Cooler & Machine on the Trolley 117
8.2.5 Installing the Gas Bottle on the Trolley 119
9. Maintenance 120
9.1 Maintaining the Plasma Consumables 121
10. Troubleshooting 122
10.1 Machine Troubleshooting 122
10.2 MIG Troubleshooting 122
10.3 TIG Troubleshooting 124
10.4 MMA Troubleshooting 125
10.5 Plasma Troubleshooting 125
10.6 Error Codes 127
11. General Welding Information 129
11.1 Metal Preparation 129
11.2 Bevelling 130
12. MIG Welding Guide 131
13. TIG Welding Guide 138
14. MMA Welding Guide 147
15. Plasma Cutting Guide 150
16. Welding Settings Guides 158
16.1 TIG Mild Steel 158
16.2 TIG Aluminium 158
16.3 TIG Stainless Steel 159
17. Gas Selection 160
17.1 MIG 160
17.2 TIG 160
18. Welding Processes & Features Glossary 161
19. MIG Torch & Consumables 166
19.1 M26 Digital Binzel Style MIG Torch 166
19.2 M26 Digital Binzel Style MIG Torch Consumables 167
20. TIG Torch & Consumables 168
20.1 T2 TIG Torch 168
20.2 T2 TIG Torch Consumables 169
21. Plasma Torch & Consumables 171
21.1 SC80 Plasma Torch 171
21.2 SC80 Plasma Torch Consumables 172
22. Recommended Accessories 175

1. Safety

Welding equipment can be dangerous to both the operator and people in or near the surrounding working area if the equipment is not correctly operated. Equipment must only be used under the strict and comprehensive observance of all relevant safety regulations.

Read and understand this instruction manual carefully for all system components, especially the safety instructions and warning notices before the installation and operation of this equipment.

Product specifications and features are subject to change without notice. While every effort has been made to provide accurate and current information at the time of publication, this manual is intended as a general guide and is not exhaustive regarding safety, welding, or the operation and maintenance of this unit. Due to the many variables in the welding field and the evolving nature of both the field and the UNIMIG product line, Welding Guns of Australia Pty Ltd. does not guarantee the accuracy, completeness, authority, or authenticity of the information in this manual or provided by any UNIMIG employee during conversations or business dealings. The product owner assumes all liability for its use and maintenance. Welding Guns of Australia Pty Ltd. does not warrant this product or this document for fitness for any particular purpose, performance, accuracy, or suitability of application. Furthermore, Welding Guns of Australia Pty Ltd. accepts no liability for injury or damages, whether consequential or incidental, resulting from the use of this product or from the content of this document, nor does it accept third-party claims of such liability.

Note:

- Observe the accident prevention regulations and any regional regulations.
- Safety and warning labels on the machine indicate any possible risks.
- Keep these labels clean and legible at all times.
- Technical changes due to further development in machine technology may lead to different welding behaviour.

Items in the manual that require particular attention in order to minimise damage and harm are indicated with the below symbols. Read these sections carefully and follow their instructions.

Note: Gives the user a useful piece of information.

Caution: Describes a situation that may result in damage to the equipment or system.

Warning: Describes a potentially dangerous situation. If not avoided, it will result in personal damage or fatal injury.

Machine Operating Safety

- Do not switch the function modes while the machine is operating. Switching of the function modes during welding can damage the machine. Damage caused in this manner will not be covered under warranty.
- Disconnect the electrode holder cable from the machine before switching on the machine to avoid arcing should the electrode be in contact with the workpiece.
- Only qualified persons should install, operate, maintain, and repair this equipment.
- During operation, keep everyone, especially children, away.



Electric Shock

Electric shock can kill. Touching live electrical parts can cause fatal shocks or severe burns. The electrode and work circuit is electrically live whenever the output is on. The input power circuit and internal machine circuits are also live when power is on. In MIG/MAG welding, the wire, drive rollers, wire feed housing, and all metal parts touching the welding wire are electrically live. Incorrectly installed or improperly grounded equipment is dangerous.

- Connect the primary input cable according to Australian and New Zealand standards and regulations.
- Avoid all contact with live electrical parts of the welding circuit, such as sockets, tungstens and electrodes with bare hands.
- The operator must wear dry, hole-free welding gloves and body protection while they perform the welding task.
- The operator should keep the workpiece insulated from themselves.
- Keep cords dry, free of oil and grease, and protected from hot metal and sparks.
- Frequently inspect input power cable for wear and tear, and replace the cable immediately if damaged. Bare wiring is dangerous and can kill.
- Do not use damaged, undersized, or badly joined cables.
- Do not weld in the rain or in wet, moist, or damp areas.
- Do not drape cables over your body.
- Disconnect power source before servicing or maintaining this equipment.
- We recommend an RCD safety switch is used with this equipment to detect any leakage of current to earth.

DC voltage remains in the inverter power source after the removal of input power.



Arc Rays

Arc rays are harmful to your eyes and skin. Arc rays from the welding process produce intense visible and invisible ultraviolet and infrared rays that can burn eyes and skin.

- Always wear an approved welding helmet with the correct shade of filter lens and suitable protective clothing, including welding gloves, while the welding operation is performed.

Recommended filter shades for arc welding

Less than 150A	Shade 10*
150A to 250A	Shade 11*
250A to 300A	Shade 12
300A to 350A	Shade 13
Over 350A	Shade 14

**Use one shade darker for aluminium.*

- Wear safety glasses under your helmet.
- Measures should be taken to protect people in or near the surrounding working area. Use protective screens or barriers to protect others from flash, glare and sparks; warn others not to watch the arc.
- Wear proper PPE and body protection made from durable, flame-resistant materials like leather.

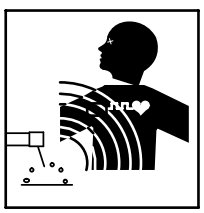

Electro Magnetic Fields (EMF)

Magnetic fields can affect Implanted Medical Devices.

- Wearers of Pacemakers and other Implanted Medical Devices should keep away.
- Implanted Medical Device wearers should consult their doctor and the device manufacturer before going near any arc welding.



Fire Hazard

Welding on closed containers, such as tanks, drums, or pipes, can cause them to explode. Flying sparks from the welding arc, hot workpiece, and hot equipment can cause fires and burns. Accidental contact of the electrode with metal objects can cause sparks, explosions, overheating, or fire. Check and be sure the area is safe before doing any welding.

- Remove any flammable materials well away from the working area. Cover flammable materials and containers with approved covers if they cannot be moved from the area.
- Do not weld on closed containers or containers that have held combustible materials, such as tanks, drums, or pipes, unless they are correctly prepared according to the required Safety Standards to ensure that flammable or toxic vapours and substances are totally removed, these can cause an explosion even though the vessel has been “cleaned”.
- Vent hollow castings or containers before welding. They may explode.
- Do not weld where the atmosphere may contain flammable dust, gas, or liquid vapours (such as petrol).
- Have a fire extinguisher nearby and know how to use it.
- Be alert that welding sparks and hot materials from welding can easily go through small cracks and openings to adjacent areas.
- Be aware that welding on a ceiling, floor, bulkhead, or partition can cause a fire on the hidden side.
- Avoid welding on tire rims or wheels, as heating can cause tires to explode and repaired rims may fail.
- Attach the earth clamp as close as possible to the welding area to minimise the risk of electric shock, sparks, and fire hazards caused by the welding current travelling through long or unknown paths.
- When not in use, ensure the MMA electrode is removed from its holder.
- Before welding, remove any combustible items, like butane lighters or matches, from your person.
- Post welding, thoroughly inspect the area to ensure there are no lingering sparks, glowing embers, or flames.
- Always use the correct fuses or circuit breakers, and don’t oversize or bypass them.
- Wear proper PPE and body protection made from durable, flame-resistant materials like leather.
- Read and understand the Safety Data Sheets (SDSs) and the manufacturer’s instructions for adhesives, coatings, cleaners, consumables, coolants, degreasers, fluxes, and metals.



Hot Parts

Hot parts can burn. Items being welded can generate and hold high heat and can cause severe burns.

- Do not touch hot parts with bare hands.
- Allow a cooling period before working on the welding equipment.
- Use the proper tools and insulated welding gloves and clothing to handle hot parts and prevent burns.



Noise Hazards

The noise from some processes or equipment can damage hearing.

- Wear approved ear protection if the noise level is high.

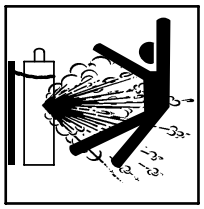

Gas Cylinders

Shielding gas cylinders contain gas under high pressure. If damaged, a cylinder can explode. Because gas cylinders are usually part of the welding process, be sure to treat them carefully.

- Protect gas cylinders from excessive heat, mechanical shocks, physical damage, slag, open flames, sparks, and arcs.
- Ensure cylinders are secured upright to prevent tipping or falling over.
- Never allow the welding electrode, earth clamp, or electrical circuit to touch the gas cylinder, and don't drape welding cables over the cylinder.
- Never weld on a pressurised gas cylinder, it will explode and kill you.
- Open the cylinder valve slowly and turn your face away from the cylinder outlet valve and gas regulator. Stand to the side of the cylinder when opening the valve.
- Only use the correct gas, regulators, hoses, and fittings for your application and keep them in good condition.
- Keep full and empty cylinders separate.
- Keep ammonia-based leak detection solutions, oil and grease away from cylinders and valves.
- Never use force when opening or closing valves.
- Don't repaint or disguise markings and damage. If damaged, return cylinders immediately.
- When working with cylinders or operating cylinder valves, ensure that you wear appropriate protective clothing – gloves, boots and safety glasses.

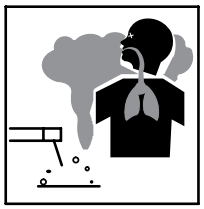

Fumes & Gases

Fumes and gases are dangerous. Welding produces fumes and gases and breathing these fumes and gases can be hazardous to your health.

- Do not breathe the smoke and gas generated while welding. Keep your head out of the fumes.
- Keep the working area well-ventilated and use fume extraction or ventilation to remove welding fumes and gases.
- In confined or heavy fume environments, always wear an approved air-supplied respirator.
- Welding fumes and gases can displace air and lower the oxygen level, causing injury or death. Be sure the breathing air is safe.
- Do not weld in locations near degreasing, cleaning, or spraying operations. The heat and rays of the arc can react with vapours to form highly toxic and irritating gases.
- Materials such as galvanised, lead, or cadmium-plated steel contain elements that can give off toxic fumes when welded. Do not weld these materials unless the coating is removed, or the area is very well-ventilated and/or you are wearing an air-supplied respirator.
- Read and understand the Safety Data Sheets (SDSs) and the manufacturer's instructions for adhesives, coatings, cleaners, consumables, coolants, degreasers, fluxes, and metals.



Gas Buildup

The build-up of gas can cause a toxic environment and deplete the oxygen content in the air resulting in death or injury. Many gases used in welding are invisible and odourless.

- Shut off the shielding gas supply when not in use.
- Always ventilate confined spaces or use an approved air-supplied respirator.

PLEASE NOTE that under no circumstances should any equipment or parts be altered or changed in any way from the standard specification without written permission given by UNIMIG.

To do so will void the warranty.

2. Input Power Requirements

UNIMIG welding machines are designed and manufactured to conform to **IEC 60974** or **AS 60974** standards. This Standard covers the safety and performance requirements of welding power sources and plasma cutting systems. This includes the **machine**, the **input cable**, and the **plug** requirements like the size of the plug that should be used.

Maximum effective supply current (I_{1eff}) according to AS 60974.1

$$I_{1eff} = \sqrt{I_1^2 \times X + I_0^2(1-X)}$$

I_0 Rated no-load supply current

I_1 Rated supply current

X Rated duty cycle

The I_{1eff} identifies the appropriate plug, input cable, and input current necessary for each device.

	Min-Max Cable Size
I_{1eff} ≤ **10A**	1.5-2.5mm²
I_{1eff} ≤ **15A**	1.5-4.0mm²
I_{1eff} ≤ **25A**	2.5-6.0mm²
I_{1eff} ≤ **32A**	4.0-10.0mm²

Don't risk damage to your machine or cause tripping and/or fire by using the wrong input current, cable or plug. Don't tamper with the plugs or file down earth pins. Doing so will void your warranty.

For your safety, UNIMIG meets the AS/NZS Standards for safe electrical compliance

All UNIMIG machines undergo an independent certification process to meet Australian and New Zealand regulations regarding electrical safety.

The triangle-circle-tick (RCM) symbol signifies that UNIMIG has taken the necessary steps to have the product comply with the electrical safety and/or electromagnetic compatibility (EMC) legislative requirements as specified by the Electrical Regulatory Authorities Council (ERAC). For your safety, please check for this symbol before buying any welding machine in Australia and New Zealand.

Depending on the specific machine, it may be necessary for UNIMIG to use a 32A single-phase plug. This is to make sure that the input supply plug and lead remain cool and do not overheat when the machine operates at its maximum capacity.

Check the rating plate on your machine

All welding machines that comply with **IEC 60974** or **AS 60974** must have a data plate similar to the one shown.

Welding machines draw some current when not welding, a higher current when welding, and a surge current when initiating an arc.

The effective rated primary current (I_{1eff}) combines the conductor heating due to these levels of current. I_{1eff} is the maximum rated effective supply current that determines the minimum plug and input cable rating as well as the minimum capacity of the input circuit that the machine gets plugged into to safely operate the machine.

Look for the I_{1eff} on the welding machine's rating plate and ensure that you have the correct input circuit to support this power draw.

***Example:** If the I_{1eff} rating on your machine is 27A then you must use a 32A plug, as a 15A plug is undersized for the welding current being used and may cause the cable to overheat.*

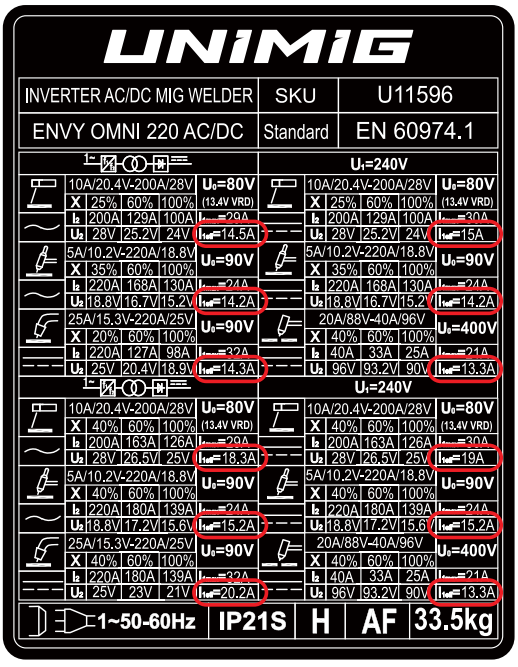

How important is the correct input cable and plug on a welding machine?

The size of the plug depends on the above formula, which uses the maximum current draw as well as the duty cycle of the power source. The use of any welding power source will not only cause the machine itself to heat up but the input cable, plug, and mains power as well.

That's why it's important to understand input and output currents and to make sure that the input circuit is correctly rated to supply the required input draw. This allows the machine to operate at or near maximum output and protects the circuit board from tripping, overheating and/or catching fire.

What if I don't have a 240volt 15amp or 32amp outlet?

If you don't have a suitable power outlet, you should contact a qualified electrician to advise whether the wiring in your building will cater for a 15amp or 32amp outlet. You may also need to upgrade your circuit breakers and possibly switchboard to suit. Failure to do this may cause an electrical fire in the building which may void insurances.

Make sure you:

- ✓ Use the correct input current cable and plug in accordance with **AS 60974.1** for your safety and to get the maximum performance from your welding machine.
- ✓ Inspect cables and plugs regularly.
- ✓ Contact a qualified electrician for advice and/or upgrade and, if needed, to replace any damaged plugs or cables.

2.1 Circuit Breaker Recommendation

The maximum input current (I_{max}) will determine the size of the circuit breaker that should be installed in order to run the machine continuously without risk of voltage drops from the circuit breaker to the plug outlet.

The recommended circuit breaker for this machine is 32A.

This recommendation is distinct from the effective current (I_{1eff}), which dictates the size of the input plug.

2.2 Welding Cable Leads Recommendation

Welding cables are crucial electrical conductors for the welding current. The appropriate thickness of the welding cable is dictated by the machine's maximum amperage and the length of cable needed. It is essential that both the earth clamp and the electrode holder are equipped with adequately sized welding cable leads to maintain effective operation.

Current (A)	Duty Cycle (%)	Lead thickness (mm^2) based off combined lengths of electrode and earth cable				
		Up to 15m	16-30m	31-45m	46-60m	61-75m
125	30	10	16	25	35	50
150	40	10	16	25	35	50
180	30	25	25	35	50	50
200	60	35	35	35	50	50
225	30	25	25	50	50	50
250	30	25	25	50	50	50
275	60	50	50	50	70	95
300	60	50	50	70	70	95
350	60	50	50	70	95	120
400	100	70	70	95	95	120
500	100	70	95	95	95	120

2.3 Extension Cord Data

See the table below as a guide based on the minimum necessary input power (in this case, 20A):

Cord thickness/Cable size (mm^2)	Maximum length of cord (m)
2.5	30
4.0	50

Using an extension lead that is too small, or using it over a longer distance than recommended, will lead to voltage drops and cause problems with power supply.

⚠ **Not following these recommendations can cause insufficient power, which can lead to unstable arc behaviour, reduced penetration, and poor weld quality.**

2.4 Generator Power Data

Operate this unit only with clean power generators that provide a surge capacity of 10,000 watts or more. The generator should limit Total Harmonic Distortion (THD) to 5% or below, as this level of THD is deemed ‘clean’ and comparable to conventional shop power. Usage of generators that don’t meet the clean power standard (5% or lower THD) is not recommended.

⚠ **Not following these recommendations can cause insufficient power, which can lead to unstable arc behaviour, reduced penetration, and poor weld quality. In some instances it can also cause damage to your equipment.**

3. Package Contents

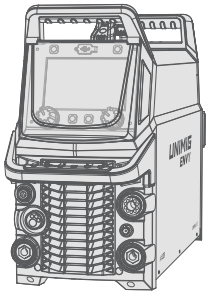

ENVY OMNI 220 AC/DC Welder

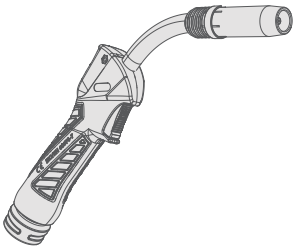

3m M26 Digital MIG Torch

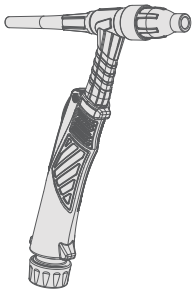

4m T2 TIG Torch

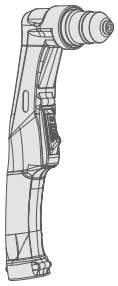

6m SC80 Plasma Torch

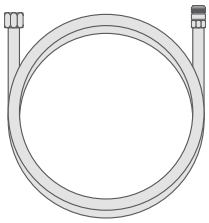

2 x Quick-Connect Gas Hoses

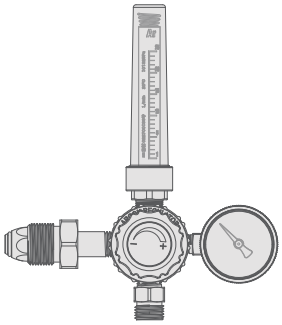

2 x Dual Stage Argon Flowmeters

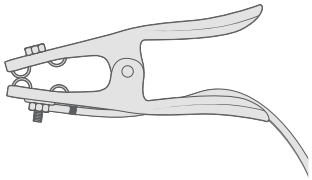

300A Earth Clamp

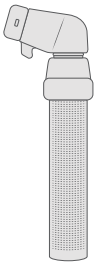

400A Electrode Holder



Includes:

- 4 x 0.8-0.9mm V Groove Roller
- 4 x 0.8-0.9mm F Groove Roller
- 4 x 1.0-1.2mm U Groove Roller

Drive Rollers

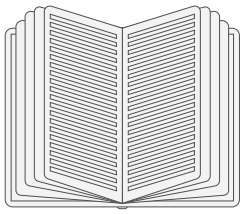

Manual

4. Technical Specifications

4.1 Machine Specifications

Technical Data

Parameter	Values
SKU	U11596
Primary Input Voltage	240V Single-Phase 50/60Hz
Supply Plug	15A
Ieff (A)	15 (15A) / 20.2 (32A)
Imax (A)	32
Rated Output	5-220A
No Load Voltage (V)	90
Protection Class	IP21S
Insulation Class	H
Minimum Generator (kVA)	10
Air Flow Draw (L/min)	190-245
Air Flow Pressure	65.27-87.02 psi 4.5-6.0 bar 0.45-0.6 MPa
Standard	AS 60974.1
Welds	**MIG:** Mild Steel, Stainless Steel, Aluminium, Silicon Bronze **MMA:** Mild Steel, Stainless Steel, Cast Iron **TIG:** Mild Steel, Stainless Steel, Aluminium, Copper, Silicon Bronze, Titanium, Magnesium, Zinc Alloys
Warranty (Years)	5

MIG Specifications

Parameter	Values
MIG Welding Current Range	25-220A
MIG Duty Cycle @ 40°C	20% @ 220A, 60% @ 127A, 100% @ 98A (15A) 40% @ 220A, 60% @ 180A, 100% @ 139A (32A)
MIG Wire Size Range	0.6-1.2mm
MIG Wire Spool Size	5kg (200mm) / 15kg (300mm)
MIG Welding Thickness Range	1-10mm
Drive Roller Size	37/24

TIG Specifications

Parameter	Values
TIG Function Type	AC/DC HF TIG & AC/DC Pulse
TIG Welding Current Range	5-220A
TIG Duty Cycle @ 40°C	35% @ 220A, 60% @ 168A, 100% @ 130A (15A) 40% @ 220A, 60% @ 180A, 100% @ 139A (32A)
TIG Welding Thickness Range	1-10mm

MMA Specifications

Parameter	Values
STICK Welding Current Range	10-200A
STICK Duty Cycle @ 40°C	25% @ 200A, 60% @ 129A, 100% @ 100A (15A) 40% @ 200A, 60% @ 163A, 100% @ 126A (32A)
STICK Electrode Range	2.5-4.0mm
STICK Welding Thickness Range	2-12mm

Plasma Specifications

Parameter	Values
Plasma Cut Current Range	20-40A
Plasma Cut Duty Cycle @ 40°C	40% @ 40A, 60% @ 33A, 100% @ 25A
Mild Steel Cut Thickness	20mm
Mild Steel Severance Thickness	25mm
Stainless Cut Thickness	18mm
Aluminium Cut Thickness	14mm
Copper Cut Thickness	8mm

Size & Weight

Parameter	Values
Dimensions (mm)	820x275x520mm
Weight (kg)	33.5kg

4.2 Duty Cycle & Overheating

The duty cycle is how long a machine can continuously weld at a selected amperage over a 10-minute period before the thermal overload protection kicks in.

MIG (15A) - 20% @ 220A, at 40°C ambient temperature

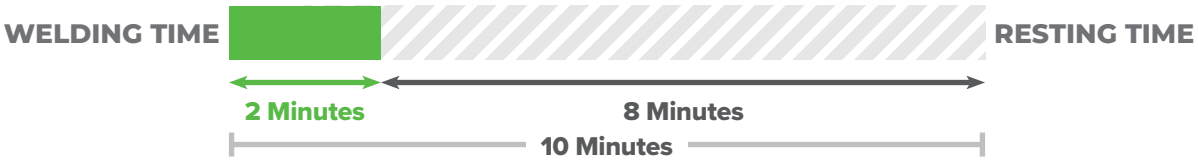

MIG (32A) - 40% @ 220A, at 40°C ambient temperature



TIG (15A) - 35% @ 220A, at 40°C ambient temperature

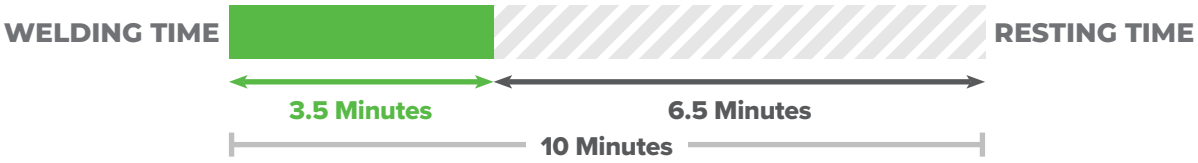

TIG (32A) - 40% @ 220A, at 40°C ambient temperature



MMA (15A) - 25% @ 200A, at 40°C ambient temperature



MMA (32A) - 40% @ 200A, at 40°C ambient temperature



Plasma - 40% @ 40A, at 40°C ambient temperature



4.3 Pinout

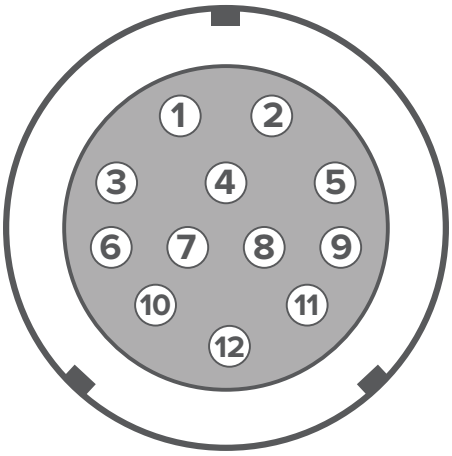

PIN Number	Standard TIG Torch Connection
1	Push Pull/Spool Gun Motor (+)
2	Push Pull/Spool Gun Motor (-)
3	Trigger (TIG + TIG Pedal)
4	Ground (Trigger TIG + Trigger Tig Pedal + Toggle Up/Down Ground + Digital Torch Ground)
5	Potentiometer Min (TIG + Spool Gun + Push Pull Gun)
6	Potentiometer Max (TIG + Spool Gun + Push Pull Gun)
7	Potentiometer Common (TIG + Spool Gun + Push Pull Gun)
8	Toggle Up Signal (TIG Torch)
9	Toggle Down Signal (TIG Torch)
10	Digital Torch Signal Tx
11	Digital Torch Signal Rx
12	Digital Torch Power (+)

4.4 Equipment Identification

Serial Number

The serial number of the device is marked below the data plate on the top of the machine. It is important to make correct reference to the serial number of the product when ordering spare parts or making repairs, for example.



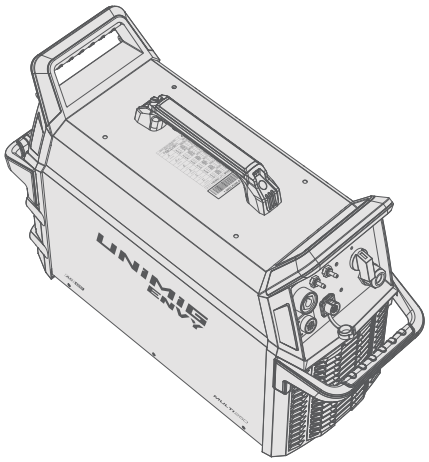

5. Machine Overview

5.1 Key Features

7” Colour LCD Touchscreen

Change settings with ease with the intuitive touchscreen controls and next-generation user interface.

Power Factor Correction (PFC)

Get the most out of your machine. The PFC maximises the electrical efficiency of the machine and automatically compensates for any voltage fluctuations, so you get more output power and the internal components last longer.

Large Wire Spool Capacity

Fits both D200 and D300 wire spools, so you can put 15kg mild steel or 7kg aluminium spools in the machine.

Job Memory

The job memory function allows you to enter and store weld parameter settings. Weld parameters can be further adjusted and stored as required. A total of 100 Jobs can be memorised and stored for recall.

Foot Control Ready

This machine supports the connection of both a wired or wireless foot control for extra versatility and convenience while welding. You can adjust your amperage hands-free to avoid disrupting your torch movement, and the wireless option reduces cables and adds greater manoeuvrability as well.

Smart Fan

Smart Fan diminishes noise, saves power, helps reduce energy costs, and minimises the number of contaminants being pulled through the machine.

Generator Compatible

Going off the grid? The ENVY OMNI 220 AC/DC can be connected to a generator, we recommend one with at least 10kVA.

IP21S Rating

Rated IP21S, so it’s protected from touch by fingers and objects greater than 12mm, and water spray from a vertical direction.

Automatic Polarity Switching

Easily swap between weld modes with auto polarity. Simply press the torch trigger, and the machine will swap to the selected mode.

5.2 MIG Features

Single & Double Pulse MIG

Less spatter. Lower heat. Smoother results. Streamline your welds with the single and double pulse functions.

Single Pulse

A single pulse weld alternates between a peak and base current, which works to minimise the amount of heat input without compromising on any of the penetration. The addition of a base current and reduction in heat means it's perfect for softer materials like aluminium. Pulse welding is also done by spray transfer, eliminating spatter and cutting your post-weld clean-up time.

Double Pulse

A double pulse weld alternates between a peak current and two base currents, reducing the heat input of the weld even further than single pulse, while still maintaining all of the benefits. Because of the faster freezing puddle, your double pulse welds come out looking just like a stack of dimes. You get the aesthetics of a TIG weld with all the speed of spray MIG.

MIG Smart-Set

Setting up for a weld has never been easier, just set your wire material and size, gas, and joint type and you’re ready to weld!

Complete MIG Weld Cycle Control

Get complete control over your MIG welds with a full set of adjustable parameters, such as pre- and post-gas flow, inductance, and burnback.

Spool Gun Ready

Make welding aluminium even easier. No need to change your existing setup. The spool gun lets you quickly switch over and get any job done with no downtime.

Push-Pull Gun Ready

Achieve smooth and steady wire feeding, especially when using softer wires such as aluminium. With a ‘Pull’ motor built into the torch, the wire can be fed over a greater distance, granting you the freedom to move and manoeuvre with ease while MIG welding.

Hot Start

Get the smoothest arc start possible. The Hot Start function gives a boost of current at the beginning of your weld, eliminating any issues with starting on cold metal, letting you weld on thicker materials and making welding aluminium even easier.

Crater Fill

End your welds as strong as they started. Crater Fill ramps your welding current and voltage down at the end of a weld, filling it in at a lower amperage, eliminating craters and pinholes.

Adjustable Arc Length

Get absolute precision on your settings. The adjustable arc length allows you to increase or decrease the preselected voltage while in synergic and pulse MIG modes.

Burnback Adjustment

Stop your wire from ever fusing with your weld or your contact tips again. Tune your burnback control to suit how much wire you want to remain sticking out from your torch when you finish a weld.

Gas-Shielded & Gasless Wires

This machine supports both gas-shielded MIG and gasless MIG, meaning you can run mild steel, stainless steel, aluminium as well as flux-cored MIG wires.

Inductance Control

Change the frequency of your short circuit MIG welds with the Inductance settings, so you can choose your preferred arc characteristics.

Line Resistance Detection

The integrated calibration feature automatically compensates for voltage drops caused by cable resistance, and displays the true arc voltage at the torch, not just at the power source, with no extra sensors or complex setups required. Get consistent voltage control across varying cable lengths and setups, for improved arc stability, better weld quality, reduced defects and less spatter.

Digital 4 Geared Wire Drive

Experience unparalleled accuracy with our Digital 4 Geared Wire Drive system. Designed to sustain a consistent arc in varying conditions and with different wire types, it ensures an accurate wire feed speed. With this system, achieving precision in every welding task is effortless.

Digital MIG Control Torch

Our digital MIG torch allows you to adjust your settings on the fly. Change the amps, current and voltage at the touch of a torch button.

5.3 TIG Features

Speed Start

Speed up the formation of the weld puddle by applying a synergic pulse program to the beginning of the weld. The initial pulse works to melt the joint edges faster, for quicker puddle formation compared to a standard arc start.

Steady Arc

Steady Arc adjusts the welding current based on the arc voltage. When the voltage goes down, the amperage will go up, and vice versa, to give a consistent weld puddle, a sharper arc and a constant heat input. Weld speeds can be increased with no fluctuations in the weld current.

TackPlus

TackPlus is a tack welding program used to create evenly spaced and sized fusion tack welds along a joint with minimal heat input.

TIG Smart-Set

The easiest way to set up for a TIG weld, simply set your filler material, joint type, tungsten diameter, material thickness, and gas and you're good to go!

Mixed AC/DC

Experience the best of both worlds. Mixed AC/DC combines the efficiency of AC and the penetration of DC- TIG in one weld. With it, you get faster welding speeds, better penetration, a faster weld puddle on cold workpieces, and you can weld thicker materials.

Independent Amplitude Control

The independent amplitude lets you adjust the amperage in both the EP and EN parts of the AC cycle, letting you completely customise the amount of heat directed to the workpiece and the tungsten.

Tungsten Optimiser

Select the tungsten diameter and get an optimised welding arc ignition in AC and DC TIG based on the chosen diameter.

Heat Control Trigger (HCT) Mode

Heat Control Trigger Mode lets you set a base current, which you can switch to at any time during a weld by pressing the trigger button. Heat Control Trigger Mode is great for manual heat input control as you go.

Cap Shaping

Get the perfect tungsten shape for your aluminium welds every time with just the click of the trigger. Turn the cap shaping feature on, press the torch trigger, and the machine will prep the optimal tungsten shape for your aluminium welds.

AC Waveforms

Customise your AC waveforms. Choose from your preferred welding waveform or use a combination of two to adjust the arc characteristics to suit your welding needs.

Higher Pulse Frequency in AC & DC

With a pulse frequency as high as 999 pulses per second in both AC and DC TIG, you can get as many pulses as you need for any scenario.

5.4 MMA Features

MMA (STICK)

You'll be able to weld anything, including cellulosic electrodes.

Pulse MMA

Pulse MMA welding helps reduce spatter, improves heat control and allows for an easier removal of slag. It also improves the speed and efficiency of vertical up welds by eliminating the use of the "Christmas Tree" technique, while still maintaining root fusion.

Hot Start

The Hot Start feature gives a boost of current at the beginning of your weld, stabilising your ignition and eliminating any issues with striking an arc, especially on difficult electrodes.

Arc Force

The Arc Force feature helps to keep the arc stabilised throughout the weld, by increasing or decreasing the peak current to compensate for your arc length, preventing the arc from cutting out or the electrode from sticking.

Anti Stick

The Anti Stick feature, which is always on, prevents your electrode from sticking to your workpiece. When the machine detects sticking, the current will drop significantly, so the electrode can be removed.

5.5 Plasma Features

Smart-Set Programs

The easiest way to set up for a plasma cut, simply select your cutting type, material type and thickness, and you're good to go!

Perforated Cut Mode

Get unrivalled performance across every kind of metal. With the perforated cutting mode, you can cut materials like grating or mesh without interruption, so you're not limited to solid plates.

Pilot Arc Start

Start your arc on any surface: painted, greasy, or rusted, or don't start on the surface at all. A pilot arc start will ignite the arc even from a short distance away, giving you better control and longer-lasting consumables.

2T/4T Trigger Modes

Easily swap between torch modes, so you stay comfortable no matter the length of the cut.

2T: (two touch) means you need to hold the trigger down on your torch while you cut. Releasing the trigger will end the cut.

4T: (four touch) means you only need to press the trigger to ignite the arc and the torch will continue to cut until you press it again to turn it off.

5.6 Machine Layout

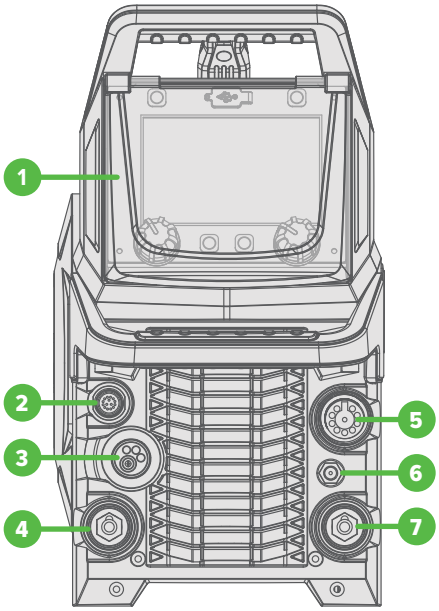

Front Panel Layout

1. Display Panel
2. 12 Pin Outlet
3. Euro Connection
4. MIG/TIG/MMA Earth Clamp Dinse Connector
5. Plasma Central Connection
6. Gas Outlet
7. Torch/Electrode Holder Dinse Connector

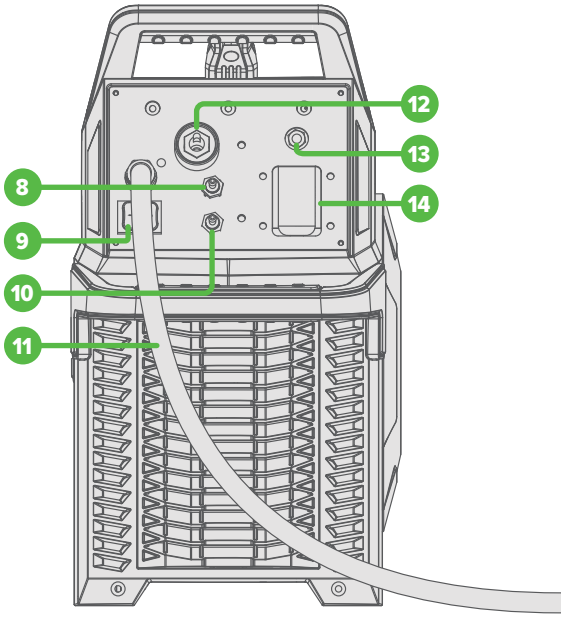

Back Panel Layout

8. MIG Gas Inlet
9. Power Switch
10. TIG Gas Inlet
11. Power Cable
12. Plasma Earth Clamp Dinse Connector
13. Air Inlet
14. Air Filter

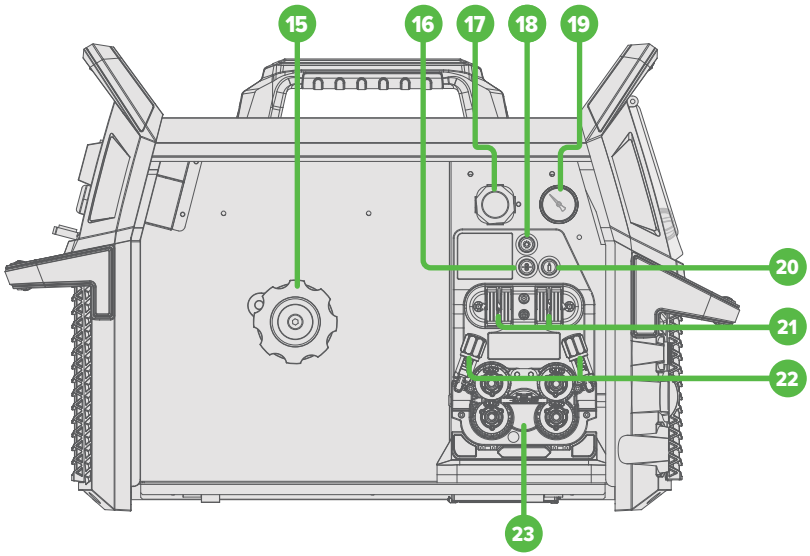

Interior Layout

15. Spool Holder
16. Wire Feed Button
17. Air Pressure Knob
18. Interior Light Button
19. Air Pressure Gauge
20. Gas Test Button
21. Spare Drive Roller Holder
22. Tension Knobs
23. Digital 4 Geared Wire Drive

6. Installation

Don't connect the equipment to the wall socket/mains supply before the installation is complete.

Don't modify the equipment in any way except for the changes and adjustments covered in the manufacturer's instructions.

Place the machine on a horizontal, stable and clean ground. Check that there is enough space for cooling air circulation in the machine's vicinity. Don't cover the machine's ventilation as it could overheat.

When a trolley is used, refer also to *see "8.2.3 Installing the Machine on the Trolley" on page 116.*

6.1 Installing the Handles

1. Screw the front handle onto the front of the machine below the screen.

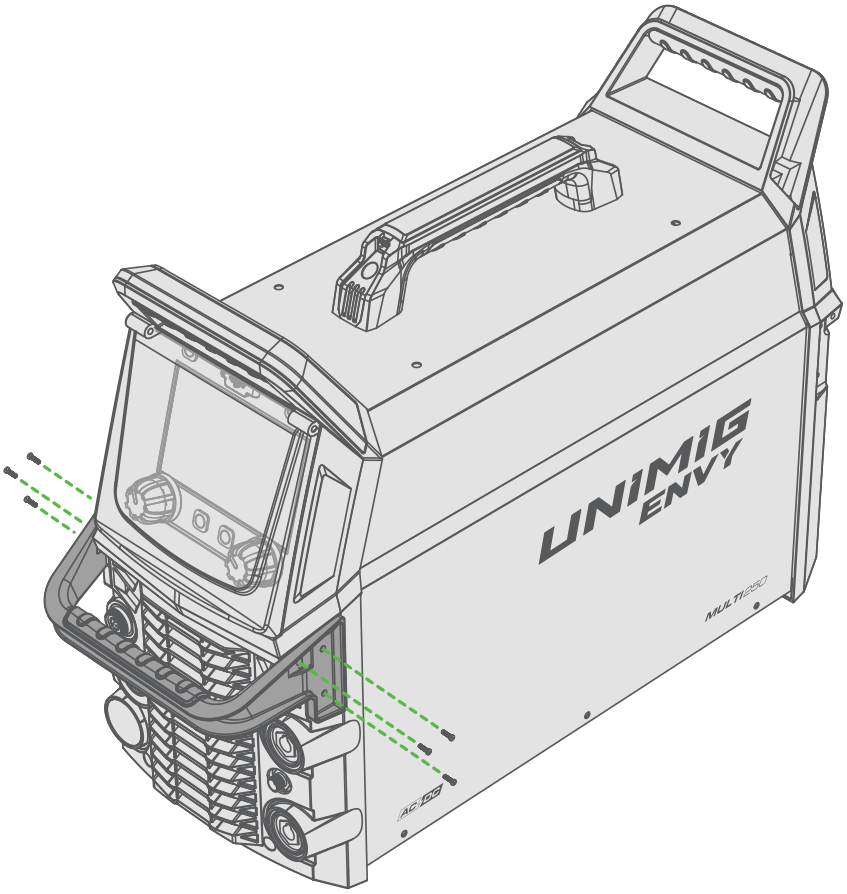

2. Screw the back handle onto the back of the machine below the power switch and cable.

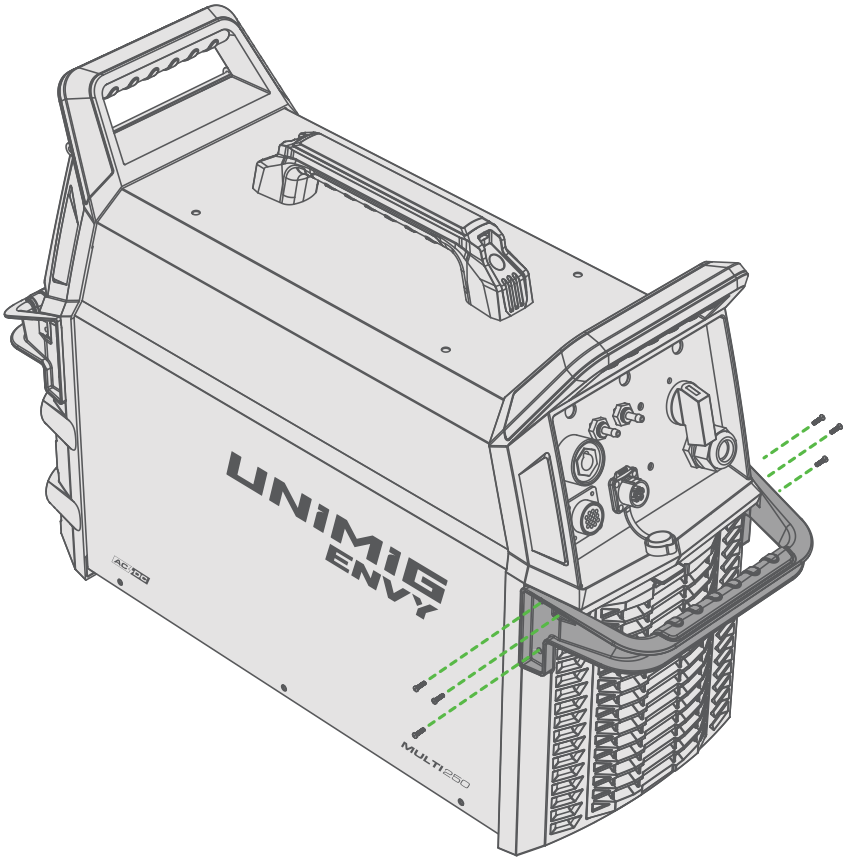

3. Attach the handle covers onto the handles.

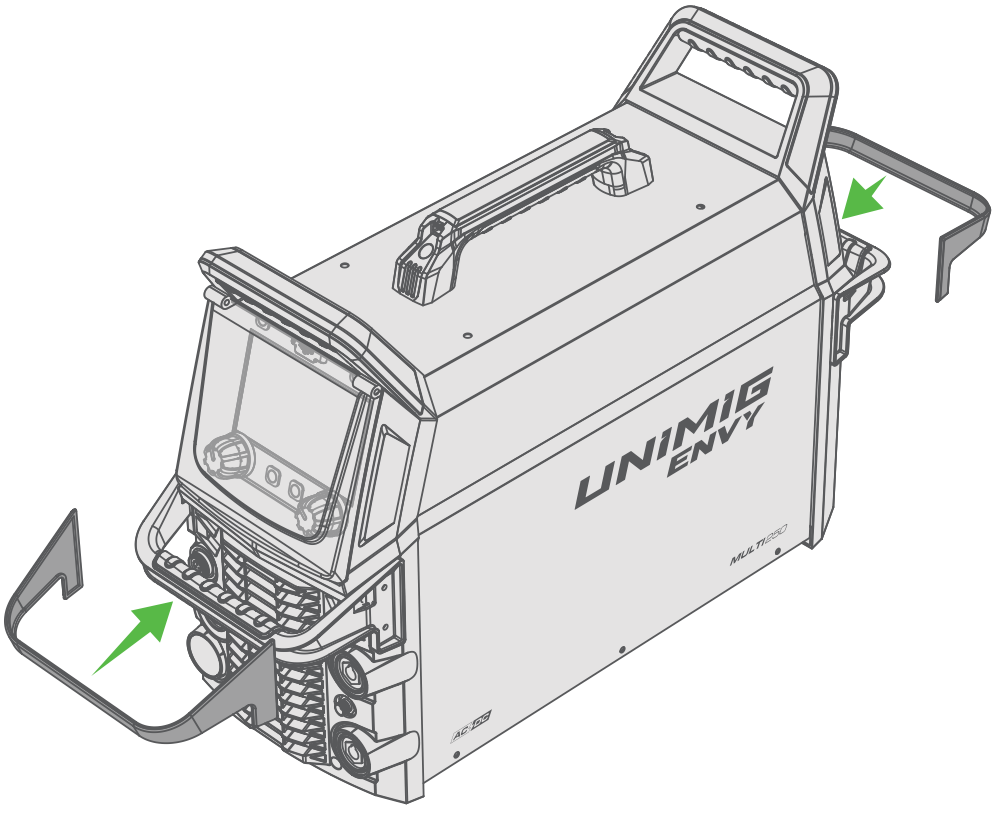

6.2 Installing the Torch Holder (optional)

1. Unscrew the screws on the side of the machine (that does not have the window).
2. Use these screws to screw in the torch holder bracket.

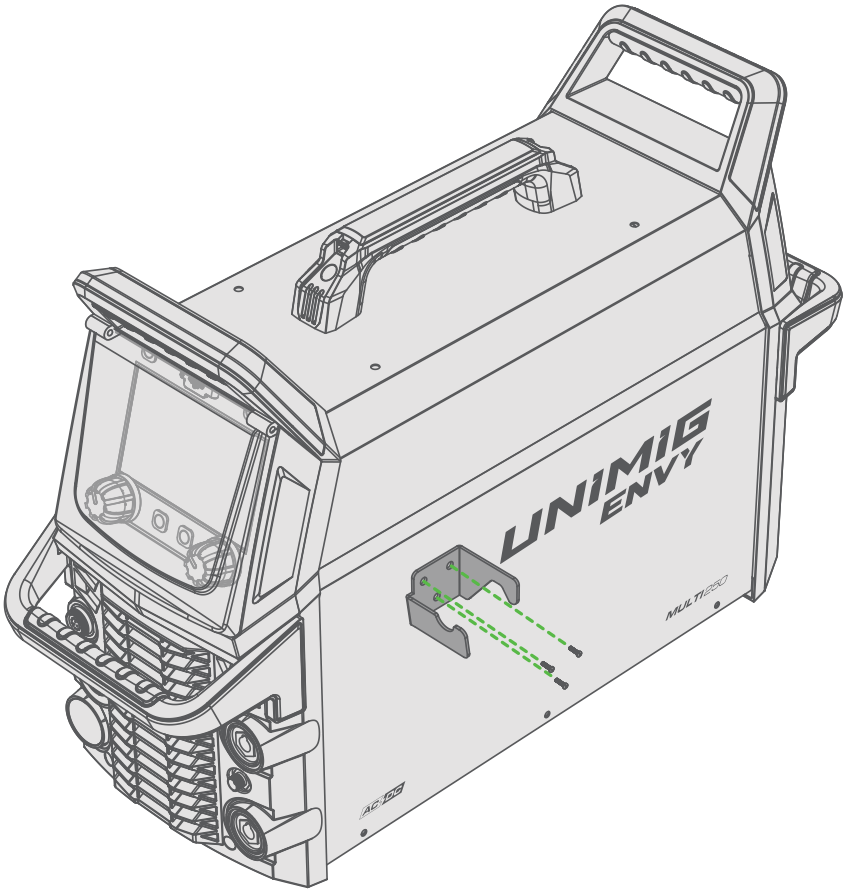

6.3 Connecting the MIG Torch

For Gas-Shielded MIG

1. Connect the MIG torch to the Euro connection, and twist to lock it in place.
2. Set the polarity to DCEP in the MIG parameters *(See "7.8 Manual MIG Mode" on page 82).*

For Gasless MIG

1. Connect the MIG torch to the Euro connection, and twist to lock it in place.
2. Set the polarity to DCEN in the MIG parameters *(See "7.8 Manual MIG Mode" on page 82).*

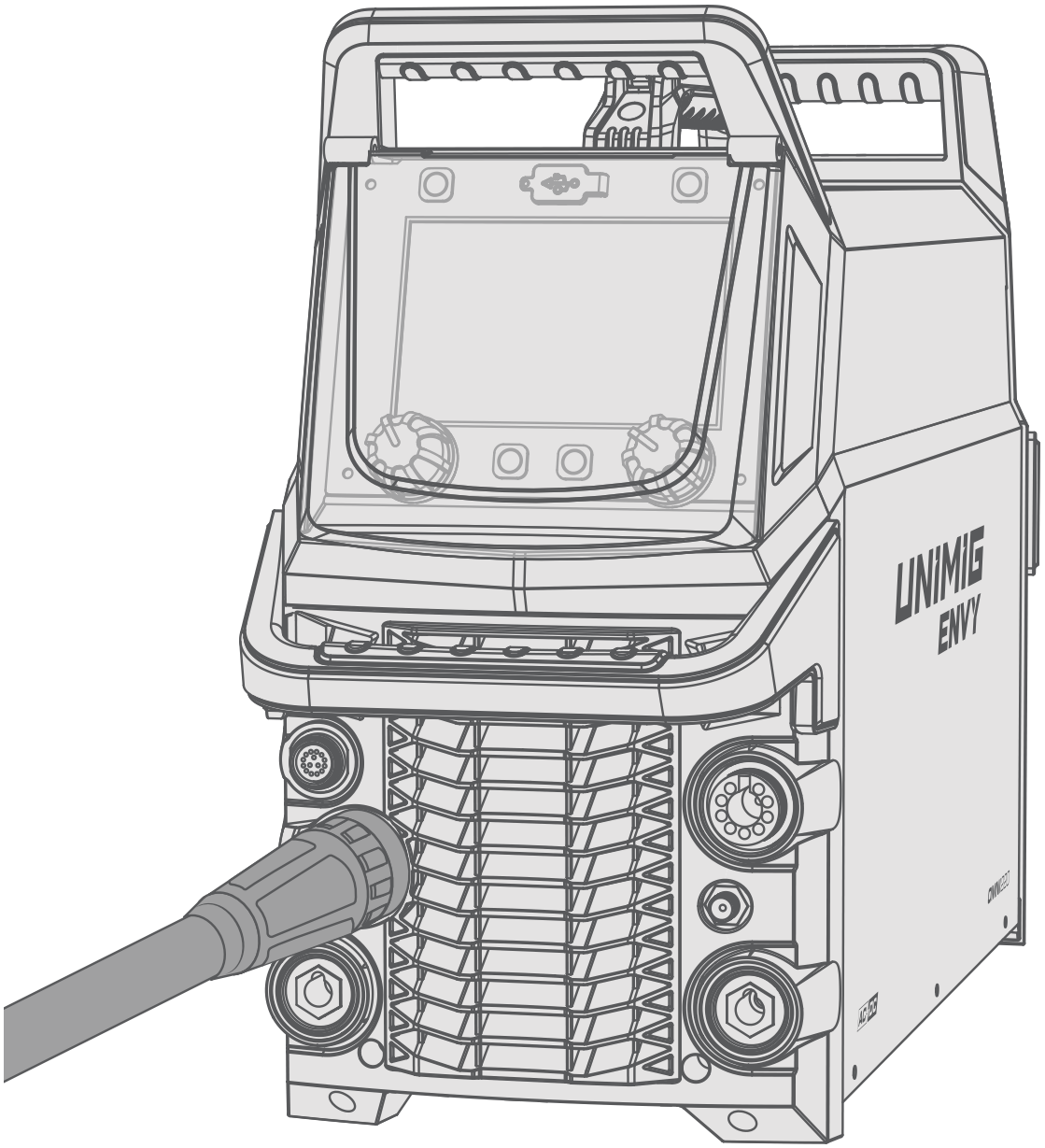

6.4 Connecting a Spool Gun

1. Connect the spool gun into the Euro connection and twist the end to secure it in place.
2. Insert the spool gun control cable into the pin socket.
3. Select Spool Gun in the MIG parameters *(see "7.8 Manual MIG Mode" on page 82)*.
4. Set the polarity to DCEP in the MIG parameters *(see "7.8 Manual MIG Mode" on page 82)*.

6.5 Connecting a Push-Pull Gun

1. Connect the push-pull gun into the Euro connection and twist the end to secure it in place.
2. Insert the push-pull gun control cable into the pin socket.
3. Select Push-Pull in the Remote Mode menu in the settings *(see "7.14 Settings Menu" on page 94)*.
4. Set the polarity to DCEP in the MIG parameters *(see "7.8 Manual MIG Mode" on page 82)*.

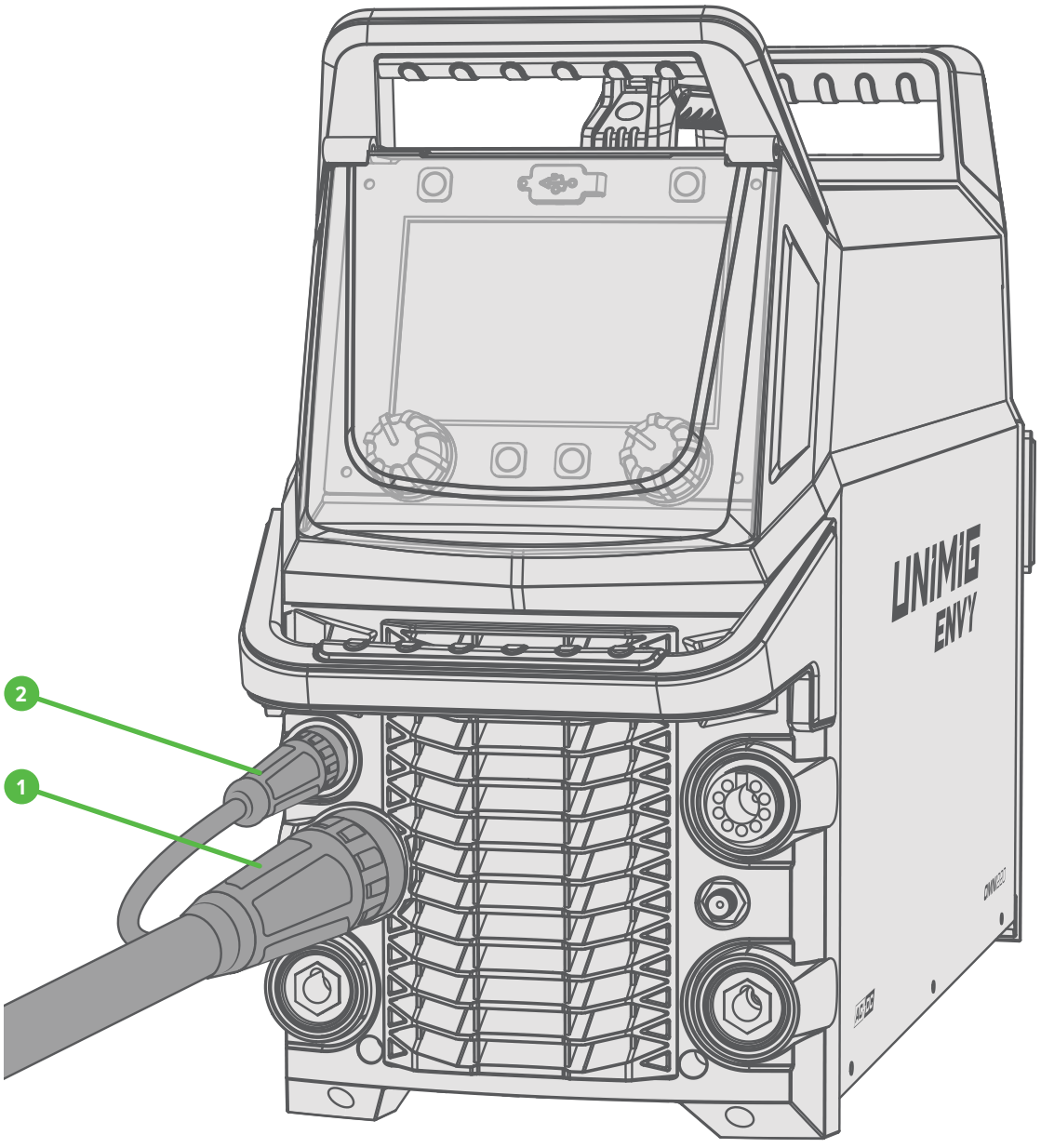

6.6 Assembling a T2 TIG Torch

1. Place the head gasket onto the torch head.

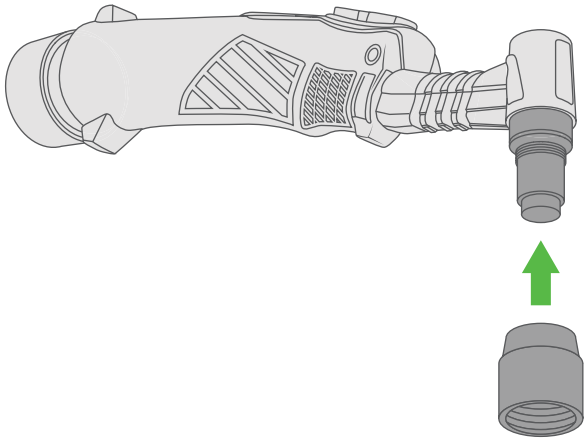

2. Screw the heat zone isolator onto the torch head. Fasten securely.

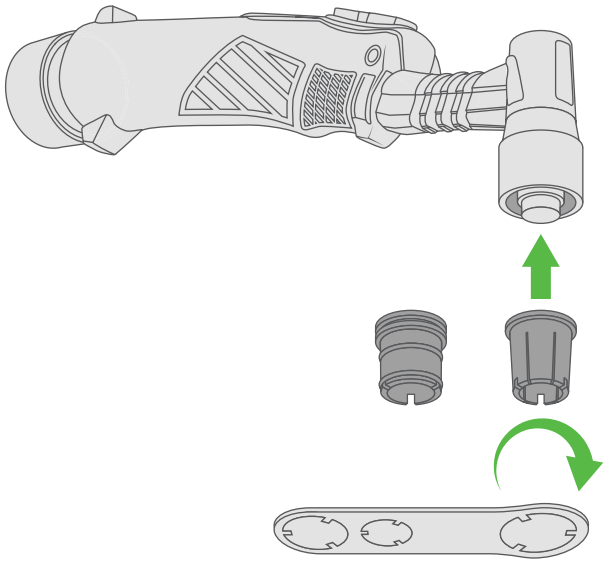

3. Insert the collet body into the torch head. Align the groove with the inside of the torch head.

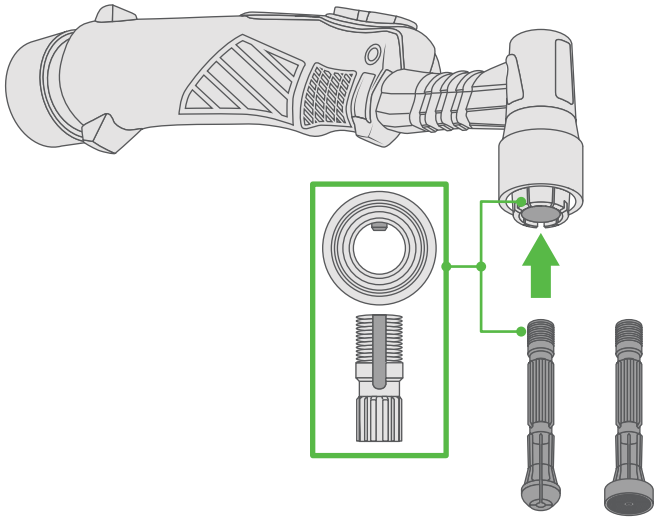

4. Screw the back cap onto the torch head, don't tighten completely.

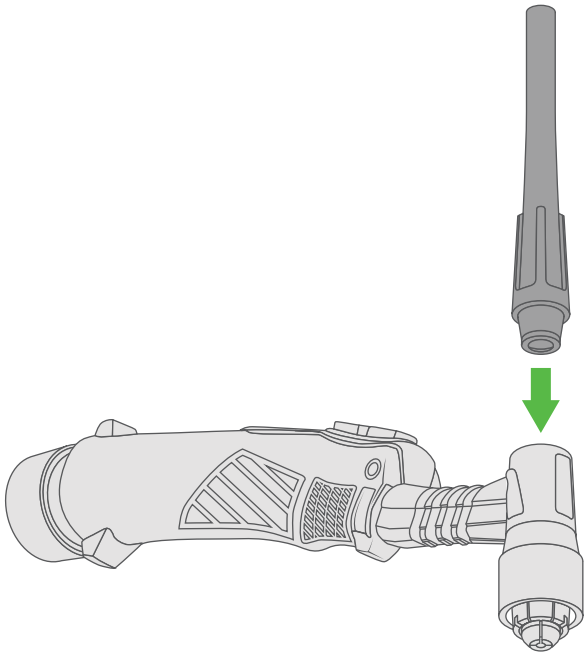

5. Insert the tungsten electrode into the collet body.

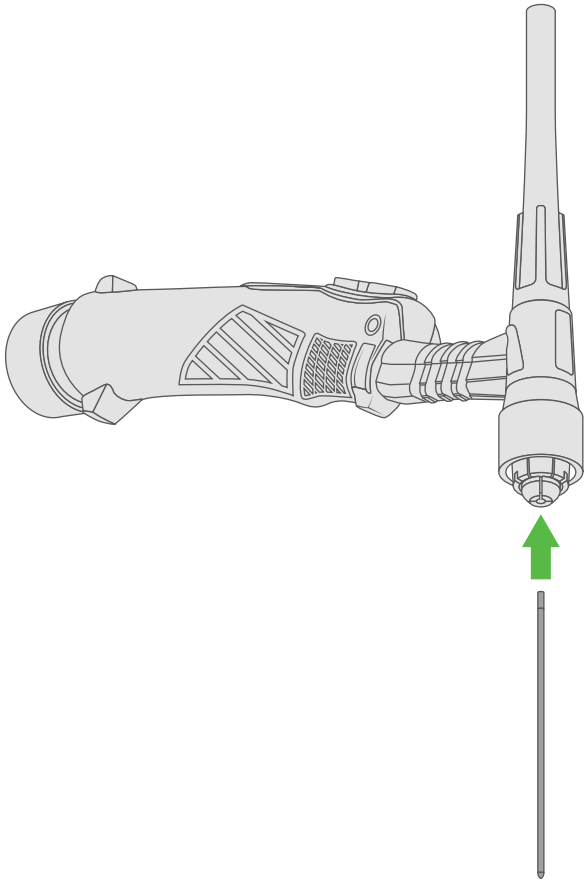

6. Slide on the ceramic cup over the collet body. Twisting the ceramic cup can aid in securing the consumables in place.

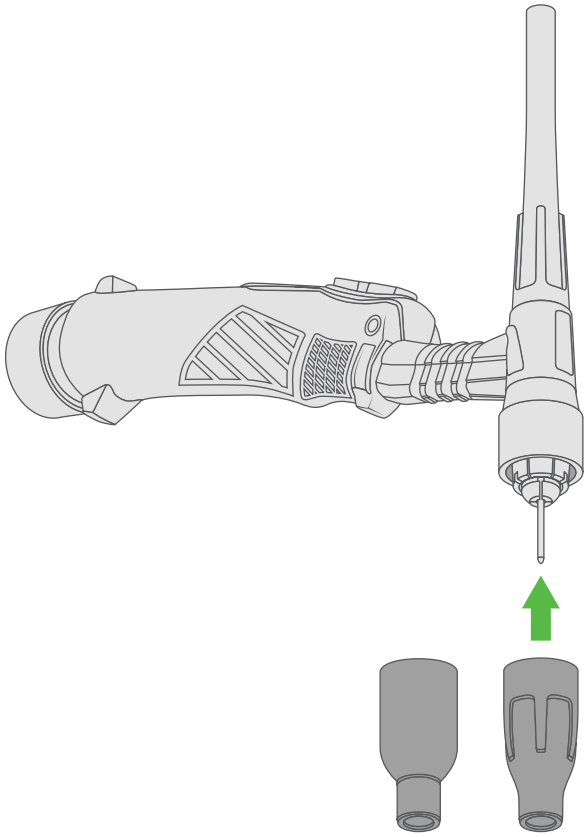

7. Adjust the tungsten to the desired length, then tighten the back cap.

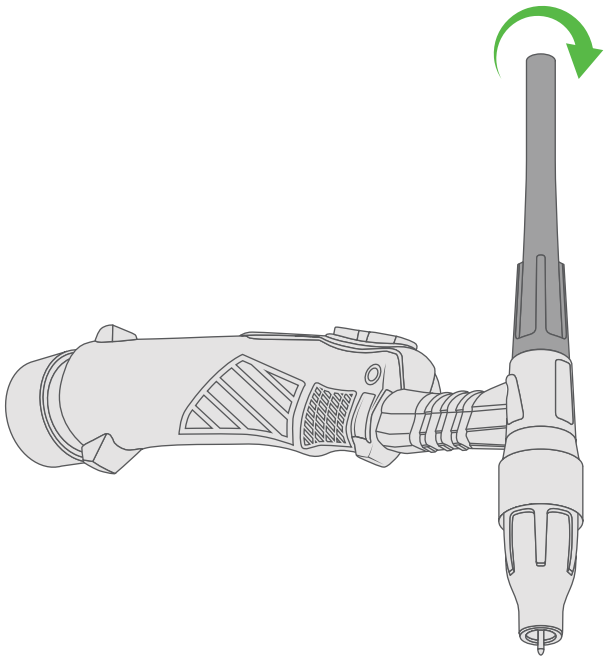

6.7 Swapping the TIG Torch Module

1. Place the torch on a flat, stable surface
2. Use a PH1 screwdriver or drill bit to remove the two screws on the torch module.

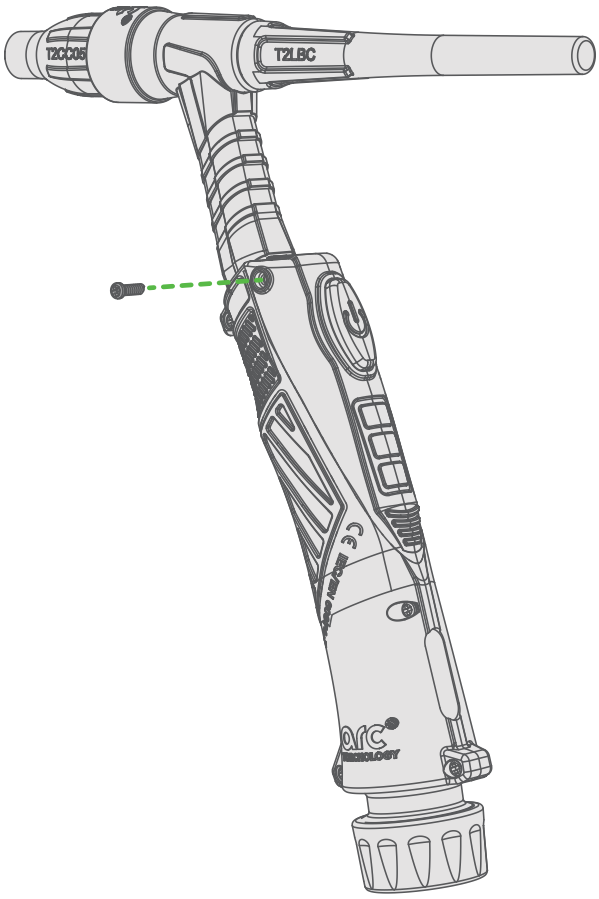

3. Carefully lift the potentiometer module out of the torch handle.

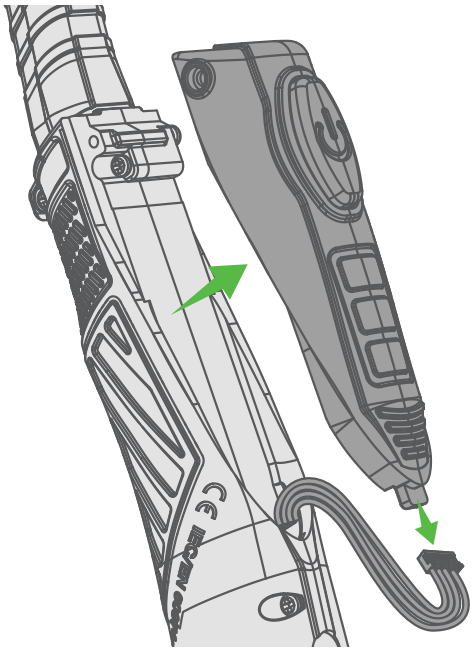

4. Disconnect the potentiometer module and plug in the single button or blank module.

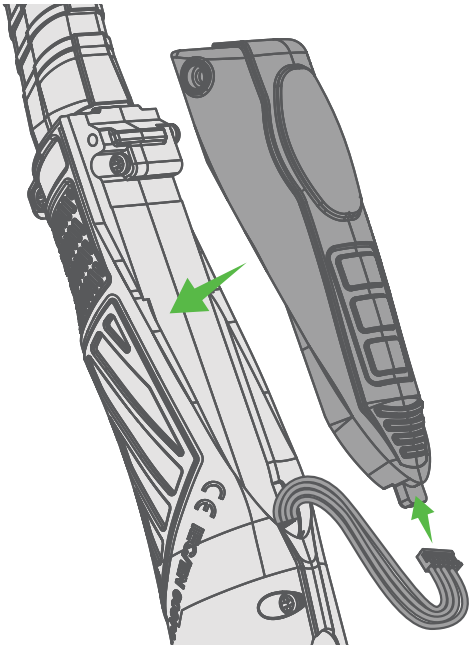

5. Screw the single button or blank module into place.

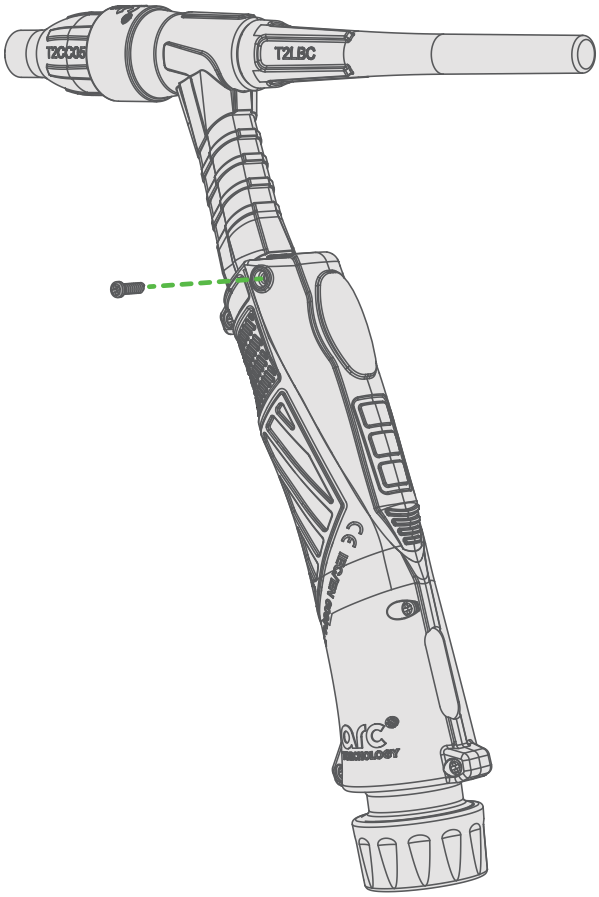

6.8 Connecting the TIG Torch

1. Assemble the TIG torch.
2. Connect the TIG torch to the torch/electrode holder dinse connection, and twist to lock it in place.
3. Plug the torch connector into the pin socket.
4. Plug the gas connector into the gas outlet.

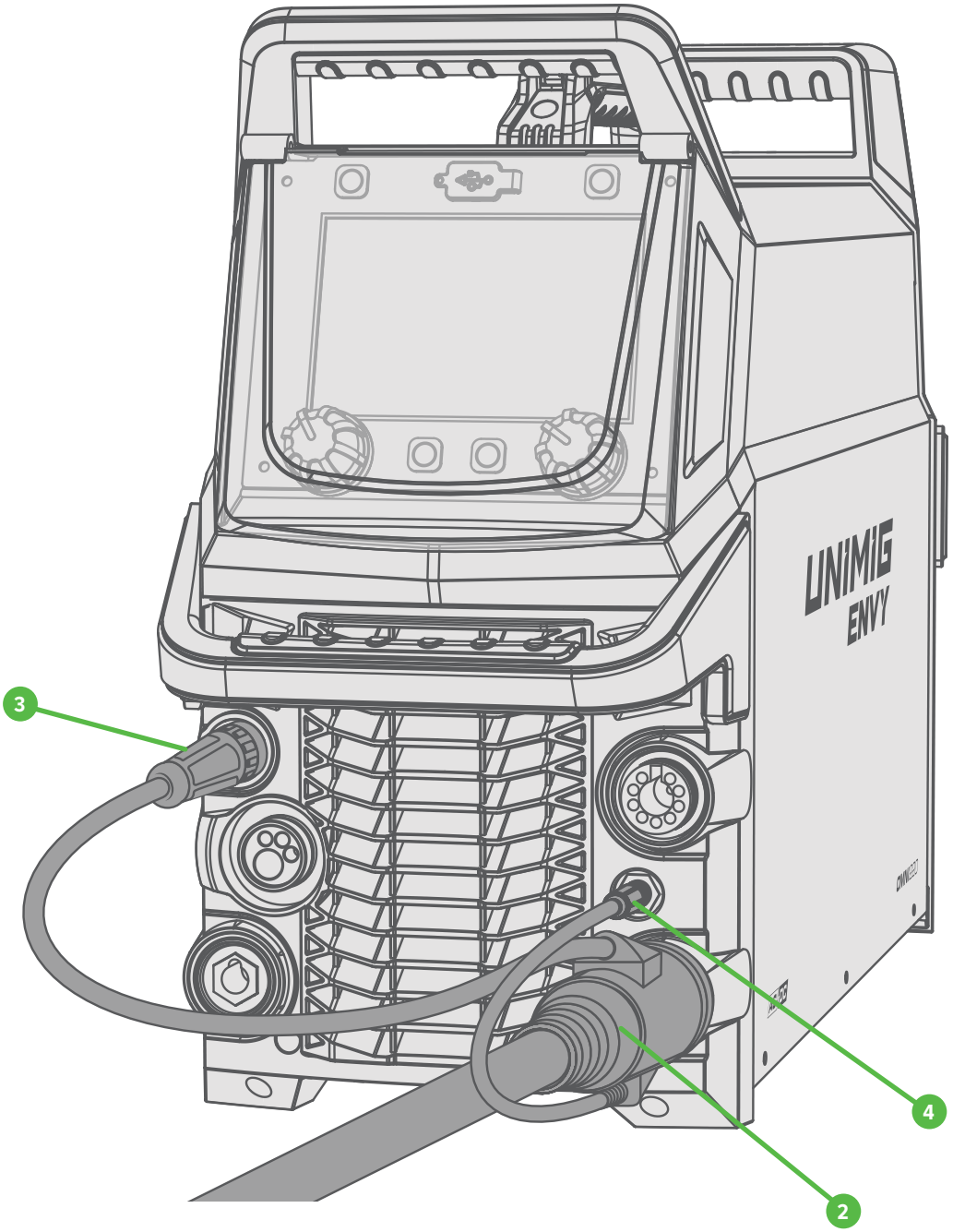

6.9 Assembling the Plasma Torch

1. Screw the electrode into the torch head. Fasten securely.

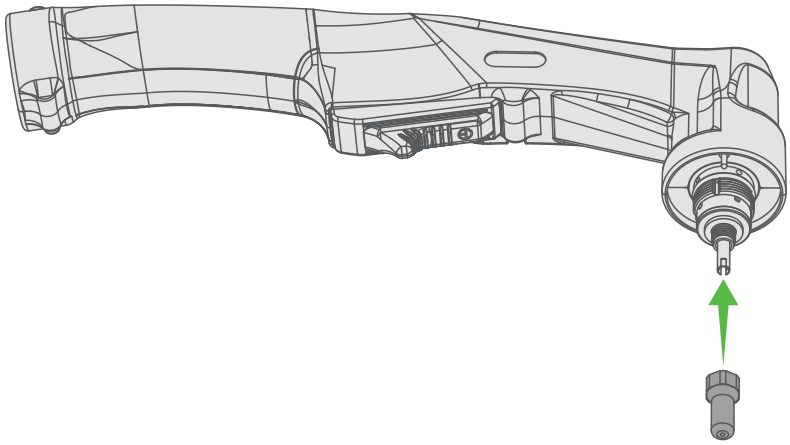

2. Place the swirl ring onto the electrode.

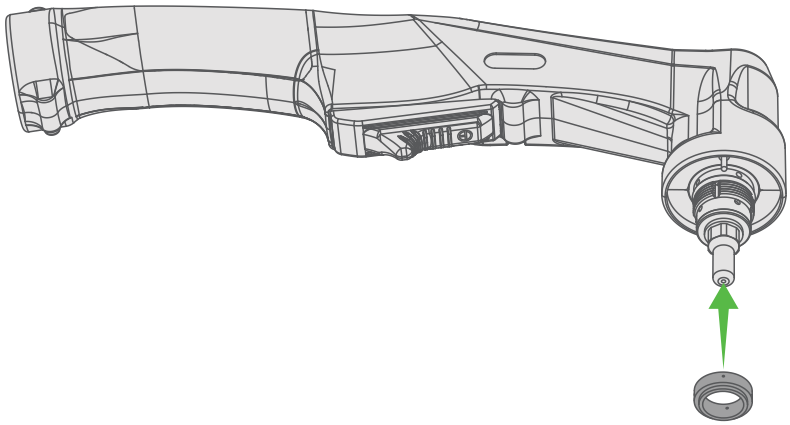

3. Place the cutting tip onto the swirl ring.

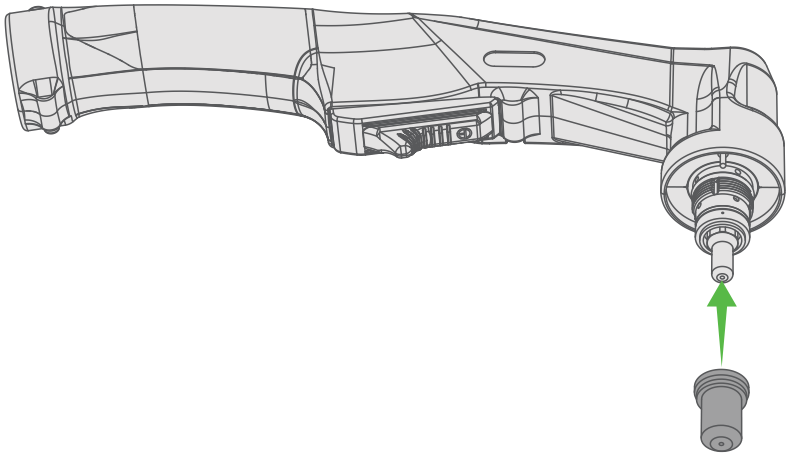

For Standoff Cutting

1. Screw the retaining cap onto the torch head. Fasten securely.

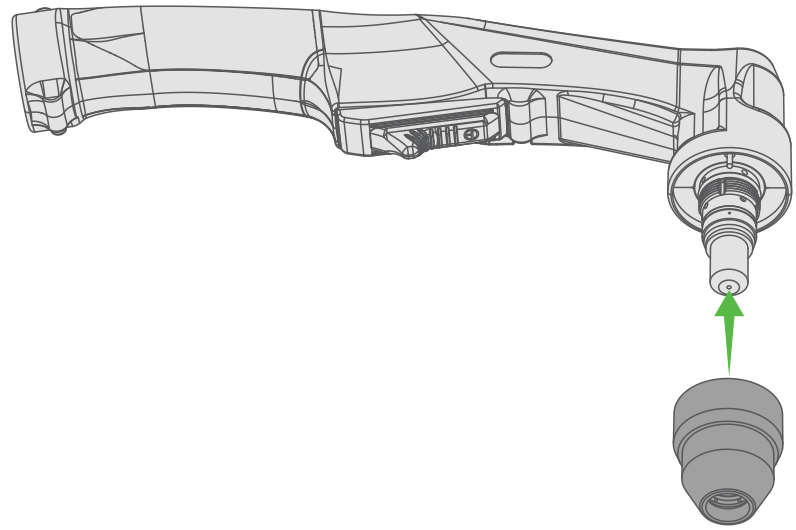

2. Place the stand-off guide onto the retaining cap.

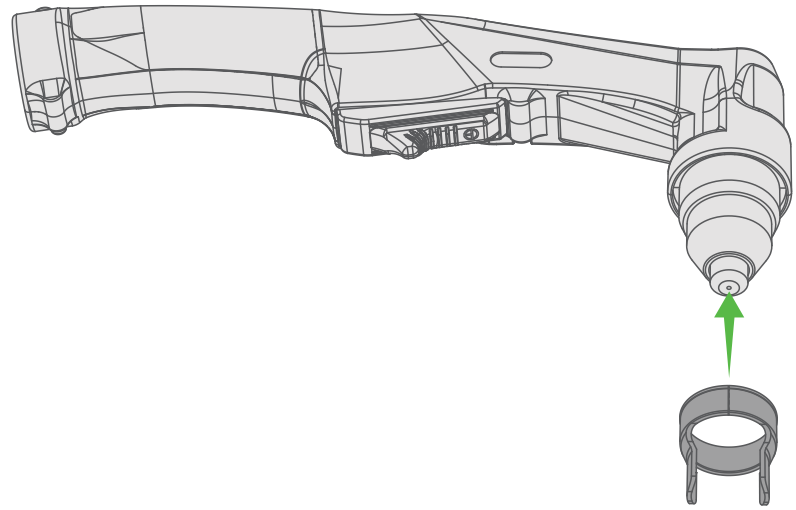

a) For circle cutting, place the cutting guide onto the retaining cap.

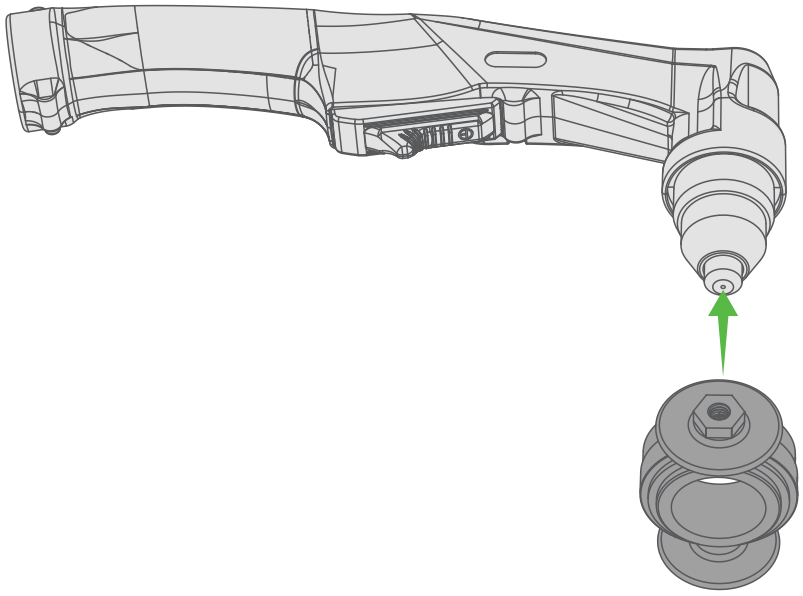

For Contact Cutting

1. Screw the shield cap body into the torch head. Fasten securely.

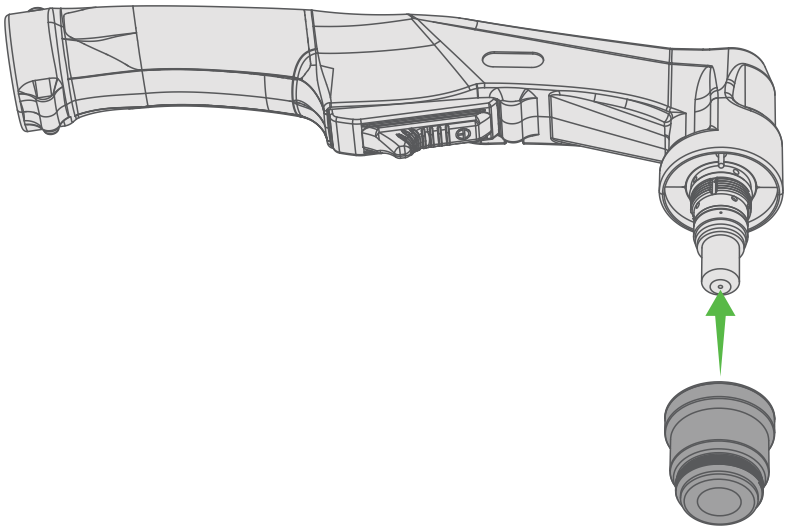

2. Screw the shield cap onto the shield cap body. Fasten securely.

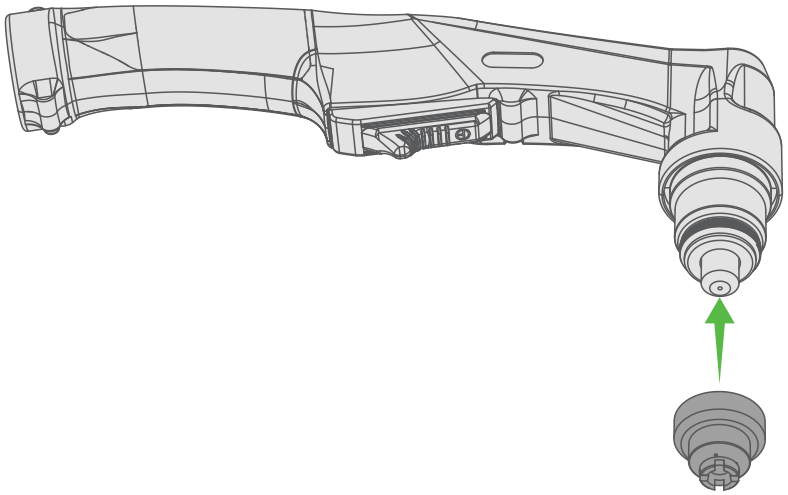

a) For gouging, screw the gouging shield cap onto the shield cap body.

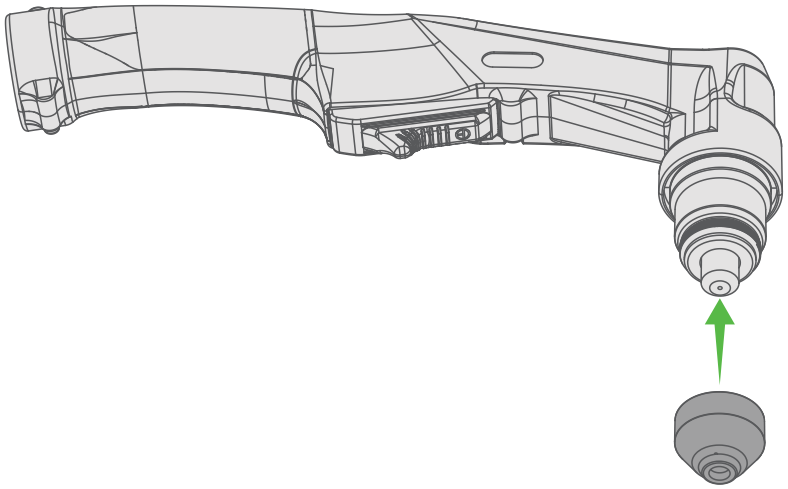

6.10 Connecting the Plasma Torch

1. Assemble the plasma torch.
2. Connect the plasma torch into the Plasma central connection.

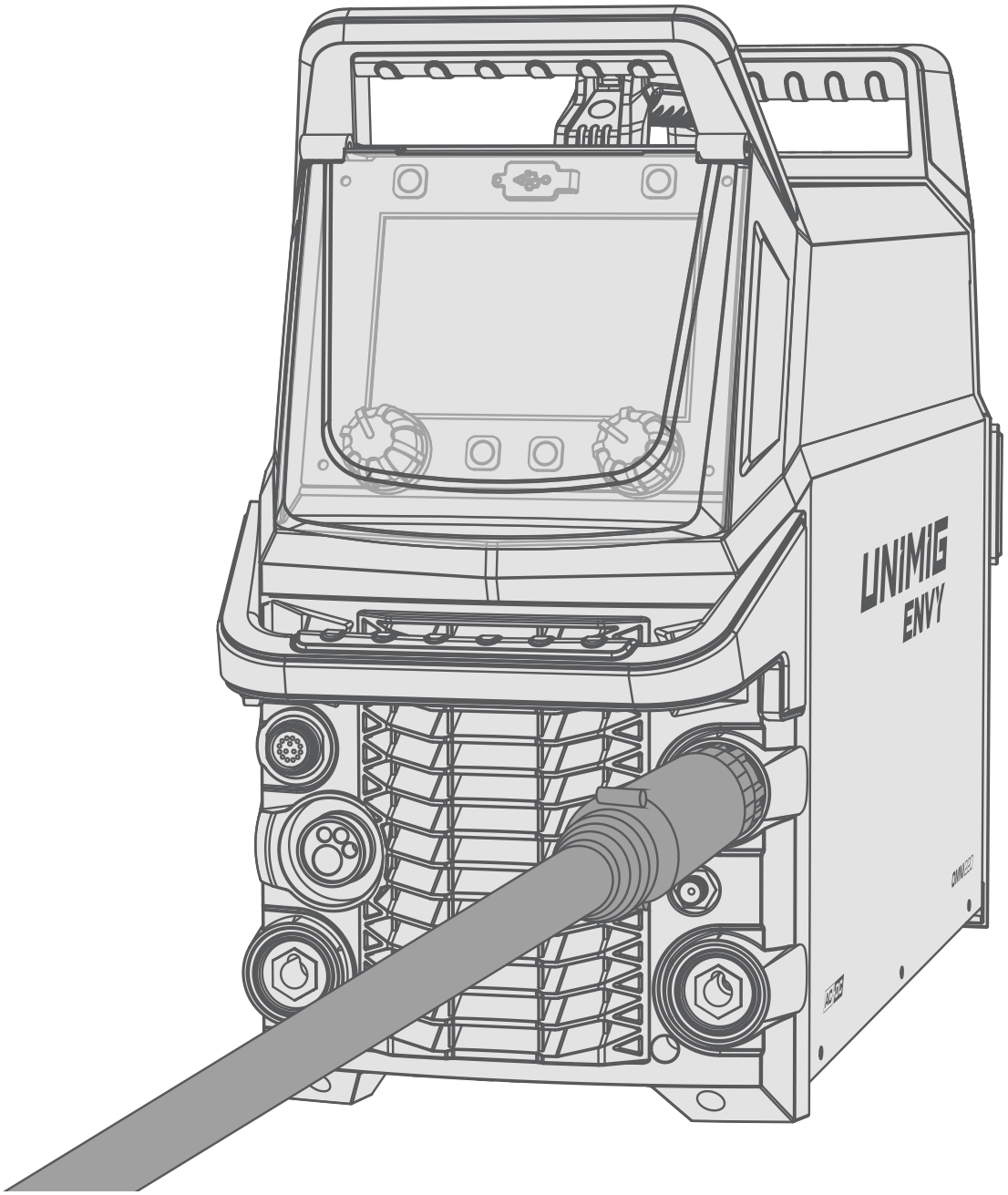

6.11 Connecting the MMA Electrode Holder

Connect the electrode holder to the torch/electrode holder dinse connection.

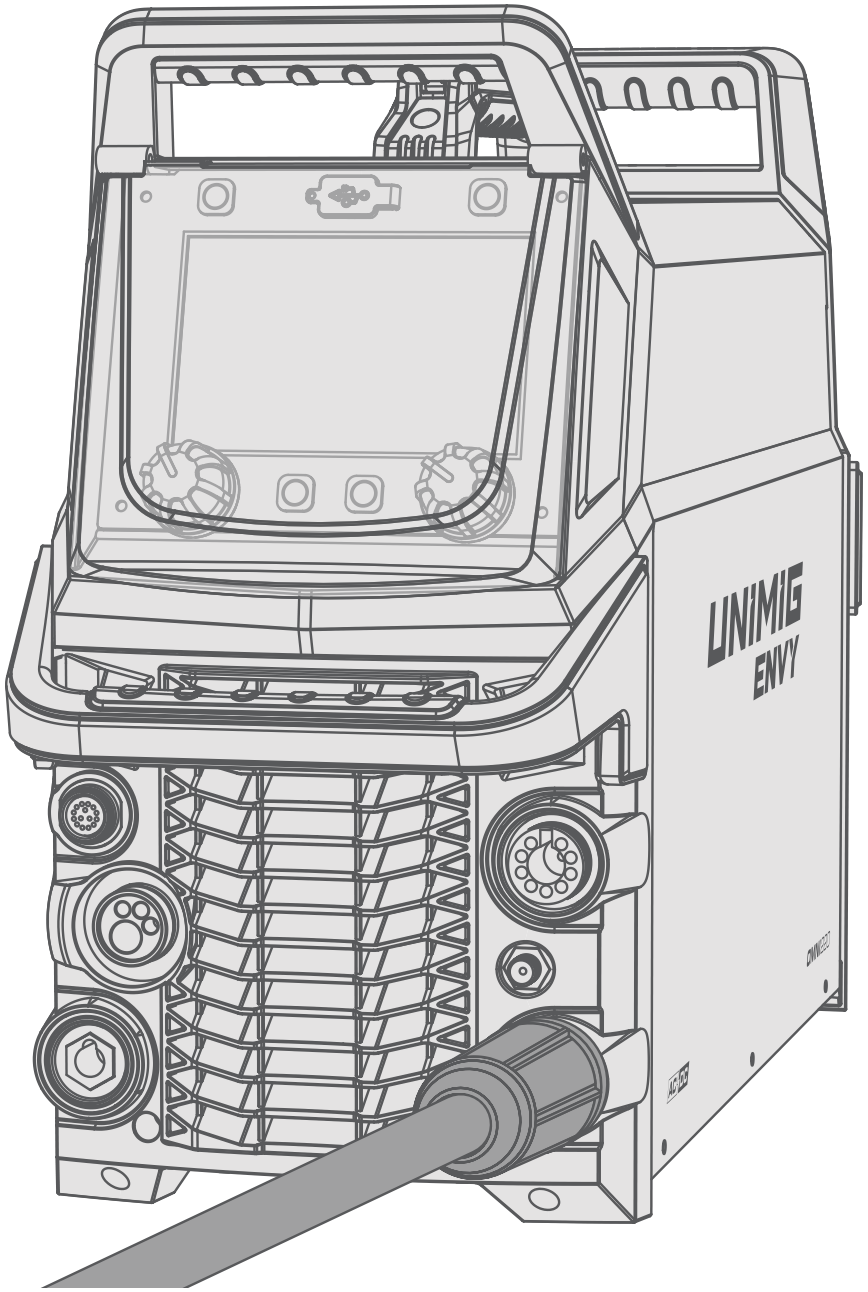

6.12 Connecting the Earth Clamp

For MIG, TIG & MMA

Connect the earth clamp to the earth clamp dinse connection on the front of the machine.

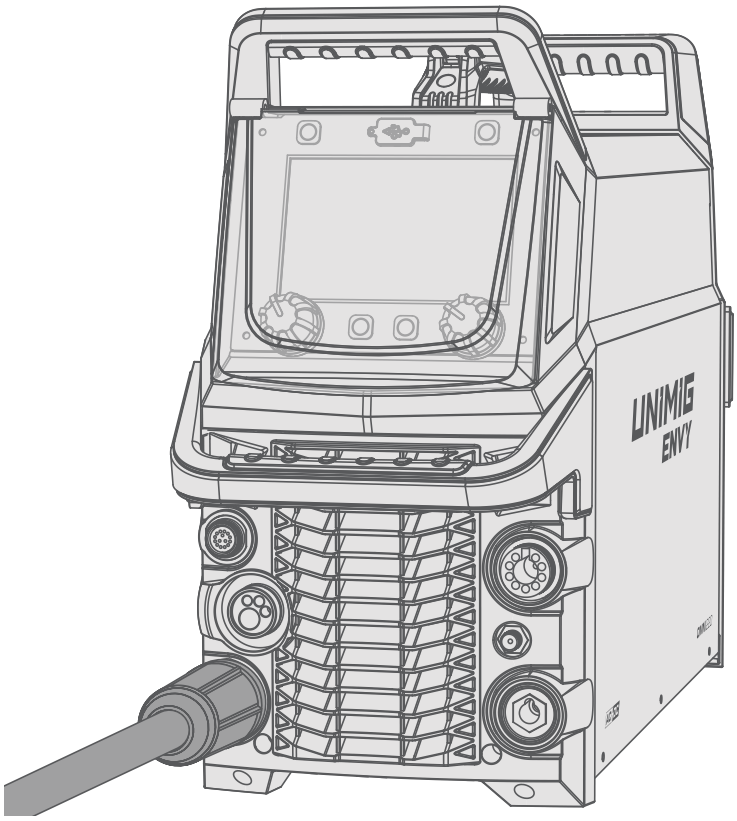

For plasma cutting

Connect the earth clamp to the earth clamp dinse connection on the back of the machine.

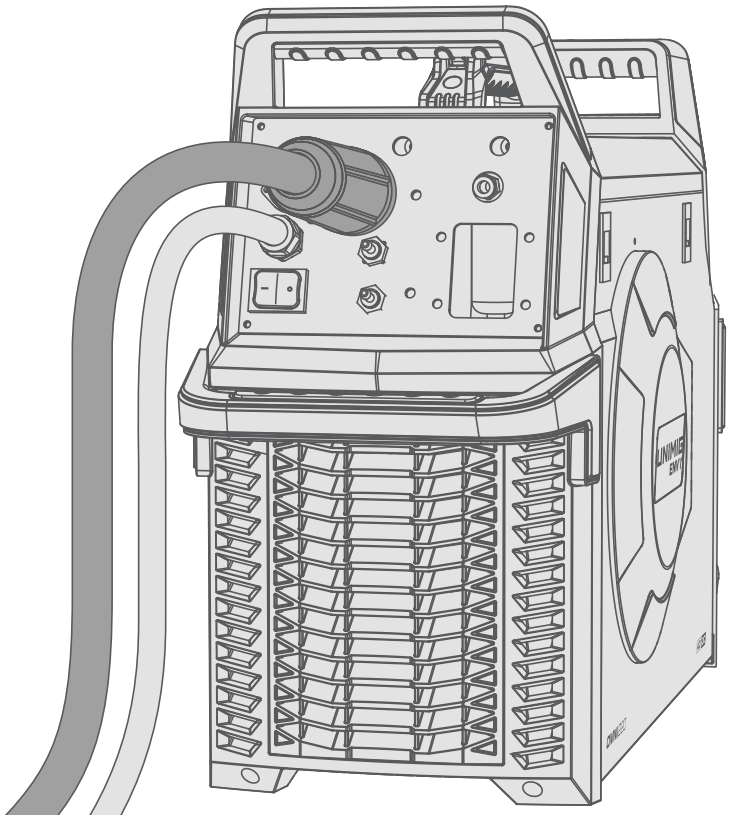

6.13 Calibrating the Cables

1. Enter the Settings Menu and select **Line Resistance Detection** *(see "Line Resistance Detection" on page 94).*



2. With the torch and earth clamp connected to the machine, remove the torch nozzle.

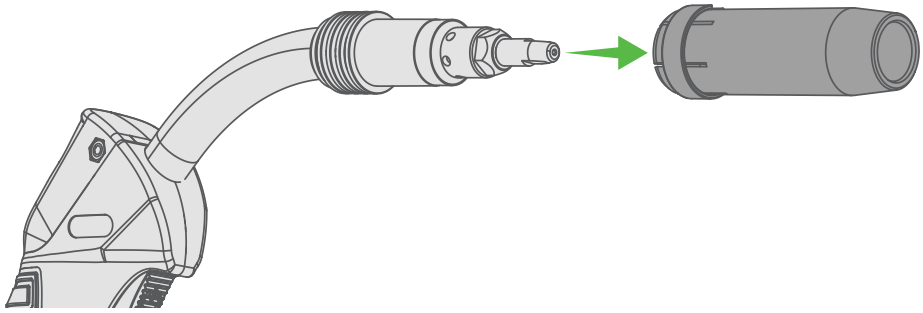

3. Follow the steps and briefly touch the clean workpiece with the contact tip.

> ⚠ **Do not press the torch trigger during this process.**

4. The machine will display the resistance values and calibrate accordingly.

> ⓘ **The cable calibration only needs to be run once, or whenever the cable setup is changed (e.g. changing earth leads, torch length, etc.).**

6.14 Connecting a Foot Pedal

6.14.1 Wired Foot Pedal

1. If connected, disconnect the TIG torch connector cable from the pin socket.
2. Connect the foot pedal connector cable into the pin socket.
3. Place the machine into remote mode. To do this:
   Enter the Settings menu and select **Remote Pedal** under the **Remote Mode** option *(See "7.14 Settings Menu" on page 94)*.

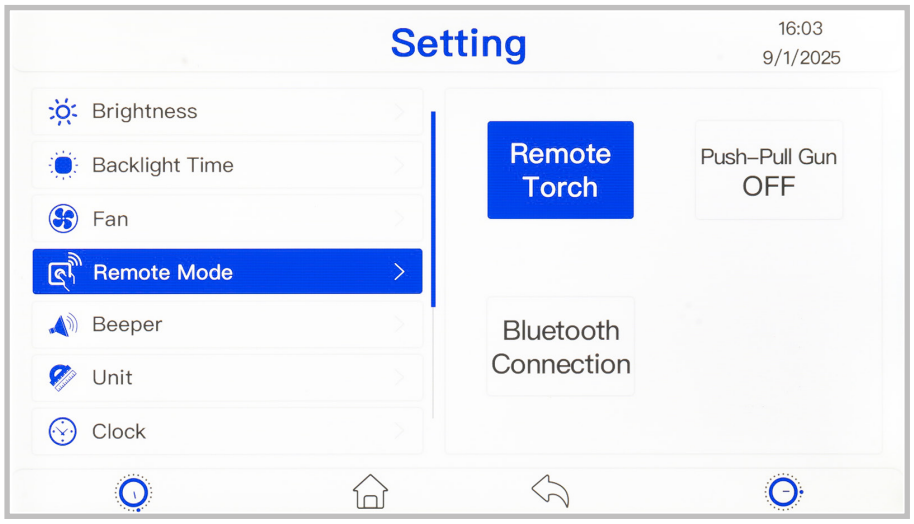

6.14.2 Wireless Foot Pedal

1. Take the foot pedal battery cover off. Install new batteries (3 x AA) and put the cover back on the foot pedal.

> **Refer to the (+) and (-) signs on the battery holder for the correct positioning of batteries.**

2. Turn the foot pedal to ON.
3. Press the pedal down and release it to have the pedal enter pairing mode. The pedal will beep while it is in pairing mode.
4. On the machine, enter the **Remote Mode** screen in the Settings menu and select **Remote Pedal** and then **Bluetooth Connection**.

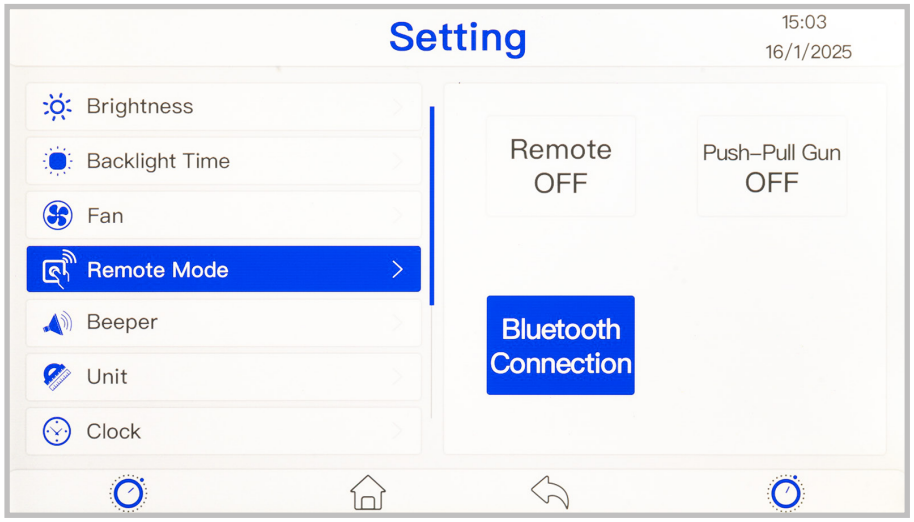

5. The machine will search for available devices. Press the right control knob to select the pedal when it appears. The foot pedal will beep quickly three times when it pairs, and the bluetooth screen will close to the main **Remote Mode** options.

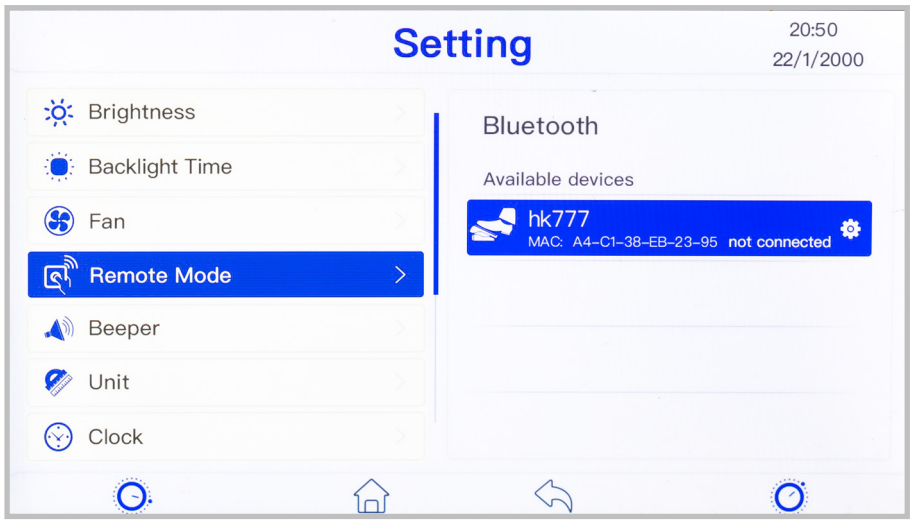

6. Entering the **Bluetooth Connection** option again will display the connected foot pedal and the adjustable settings for this device *(See "7.14 Settings Menu" on page 94)*.

When using a foot pedal while pulse welding, the pedal will adjust the peak amperage as a percentage.

For example, if the peak amperage is set to 100A and the base amperage to 30A, fully pressing the pedal will give a peak amperage of 100A. Pressing the foot pedal halfway will reduce the peak amperage to 50% of the set peak, in this case 50A, and maintain the base amperage of 30A.

6.15 Installing & Replacing the Drive Rollers

Select the drive roller that suits the wire material and size being used. This machine comes with three types of roller:

- **V groove** - for solid wires like mild and stainless steel
- **F groove (Knurled)** - for flux-cored wires
- **U groove** - for soft wires like aluminium

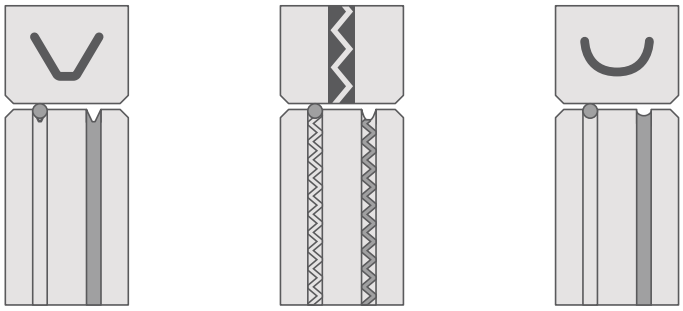

The wire size label on the drive rollers corresponds with the opposite groove.

When installing the drive rollers, the label on the roller for the desired wire size should be facing outwards.

E.g. If 1.2mm wire is installed, the 1.2mm label on the roller should face outwards when it's inserted, so the 1.2mm wire groove lines up with the wire.

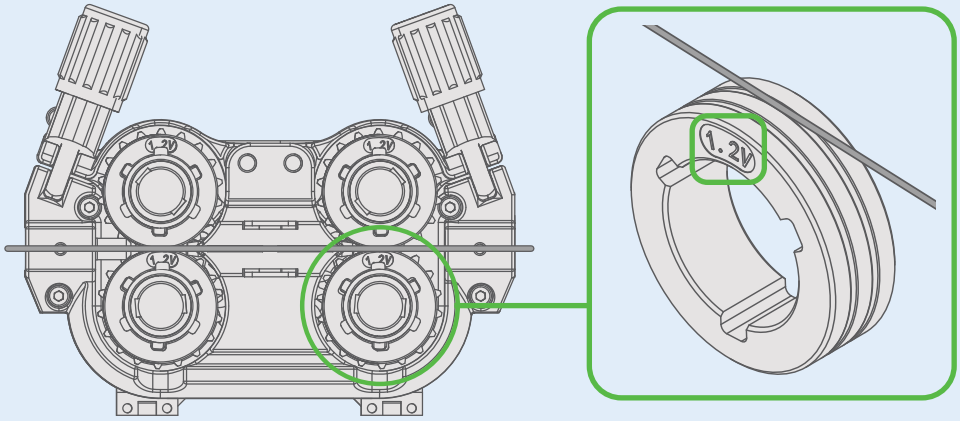

1. Pull down the drive roller tensioner knobs to release the upper wire drive rollers and lift them out of the way.

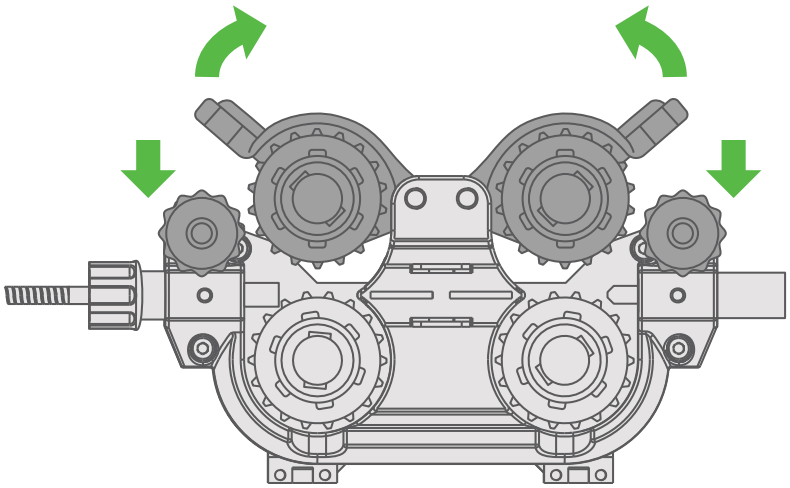

2. Unlock the roller caps.

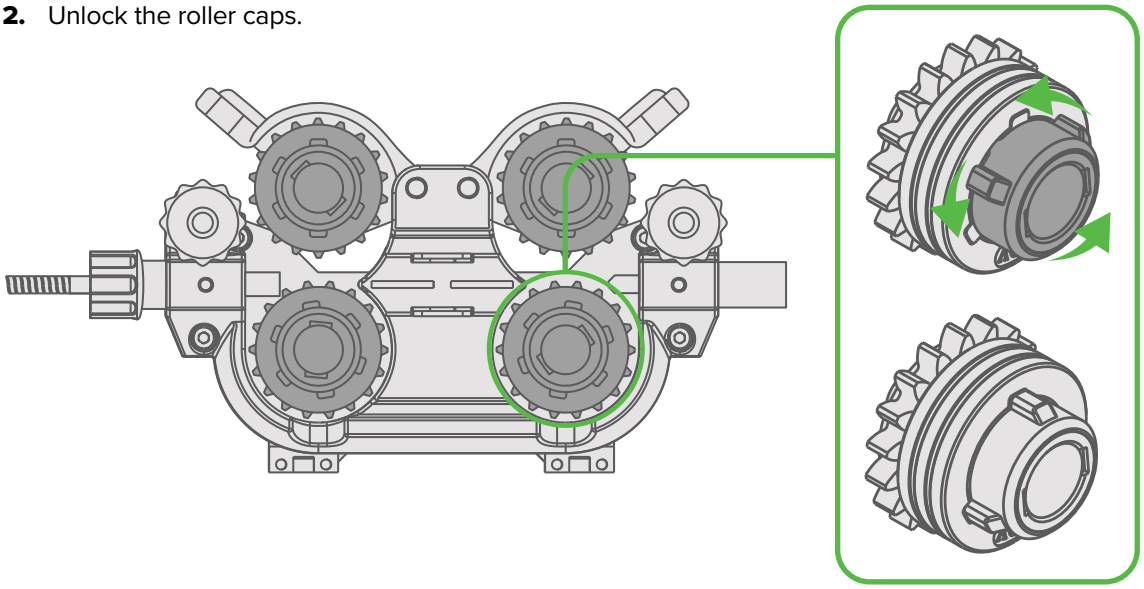

3. Remove the drive rollers and replace them with the necessary rollers. When inserting a new drive roller, make sure to line up the key slot.

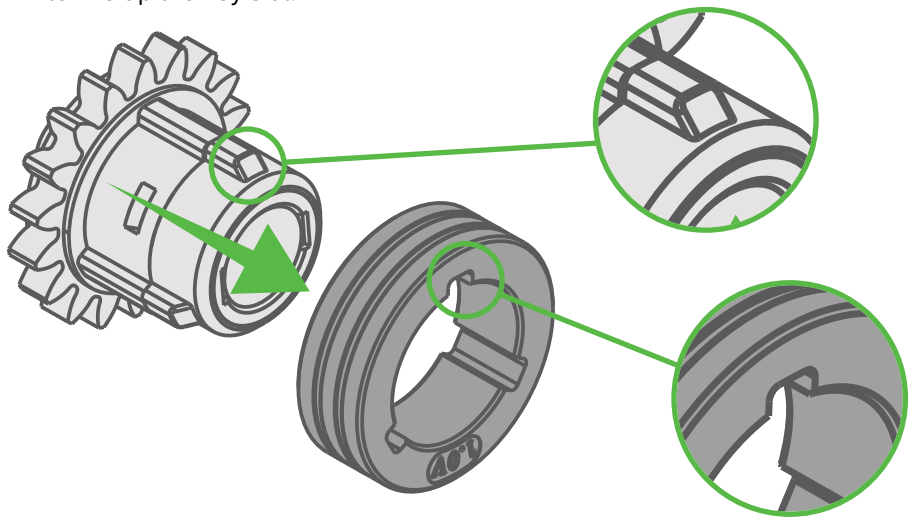

4. Repeat these steps in reverse and lock the roller caps, close the upper drive rollers and lift the tensioner knobs back up to lock them into place.

5. *See "6.17 Installing & Replacing the Wire" on page 44* for more information on how to install the wire.

6.16 Removing & Installing the Guide Tube

Before changing the inlet tube, remove the MIG torch and any wire that may be inside the machine.

If there is no guide tube pre-installed in the machine, or you are swapping from aluminium back to a mild or stainless steel wire, a guide tube needs to be installed.

To Remove the Guide Tube

1. Pull down the drive roller tensioner knob on the right hand side to release the wire drive roller and lift it out of the way.
2. Unlock the roller caps on the right hand side of the wire drive.
3. Remove the drive rollers.

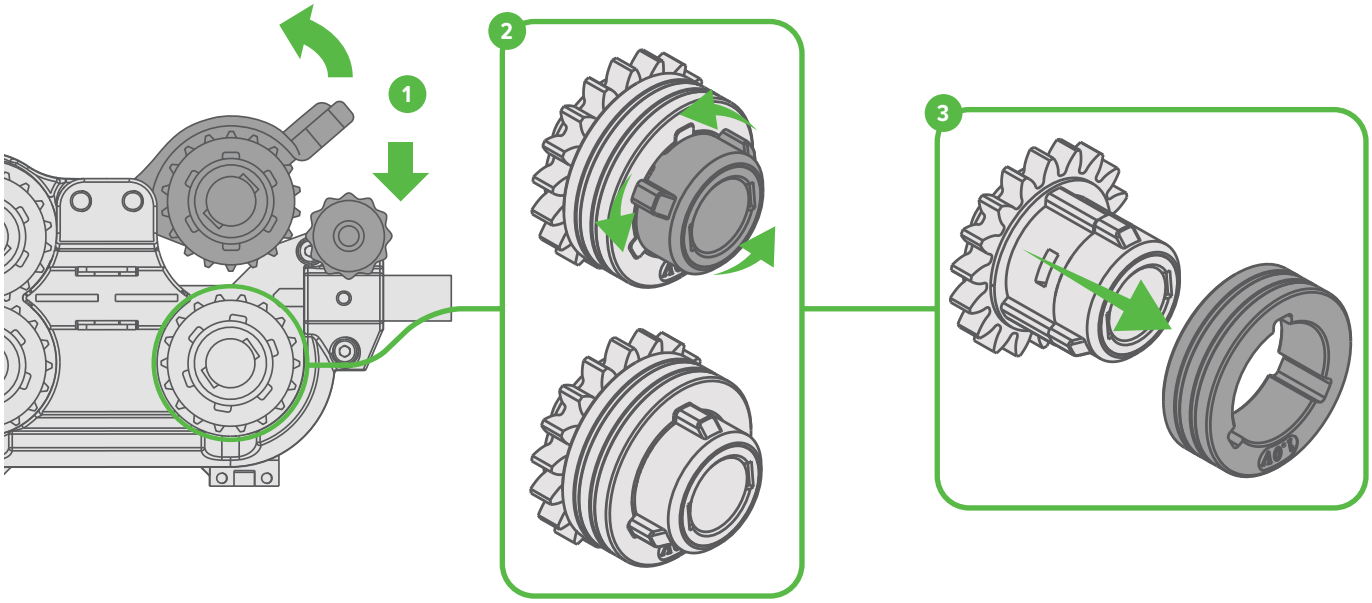

4. Use a pair of pliers to remove the circlip from the guide tube.

If there is no circlip lock on the guide tube, it can be pushed from the drive roller side and out the front of the Euro Connection block.

5. Remove the guide tube from the Euro Connection block.

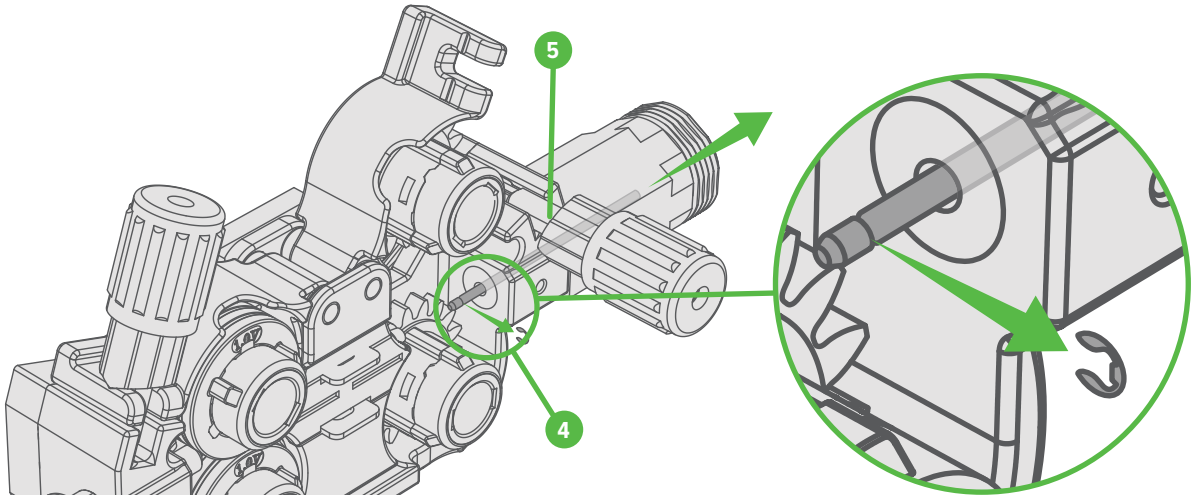

To Install the Guide Tube

1. If there is a circlip already installed on the guide tube, use a pair of pliers to remove the circlip *(see "To Remove the Guide Tube" on page 42)*.
2. Insert the guide tube into the Euro Connection block.
3. Install the circlip onto the the guide tube to lock it into place.

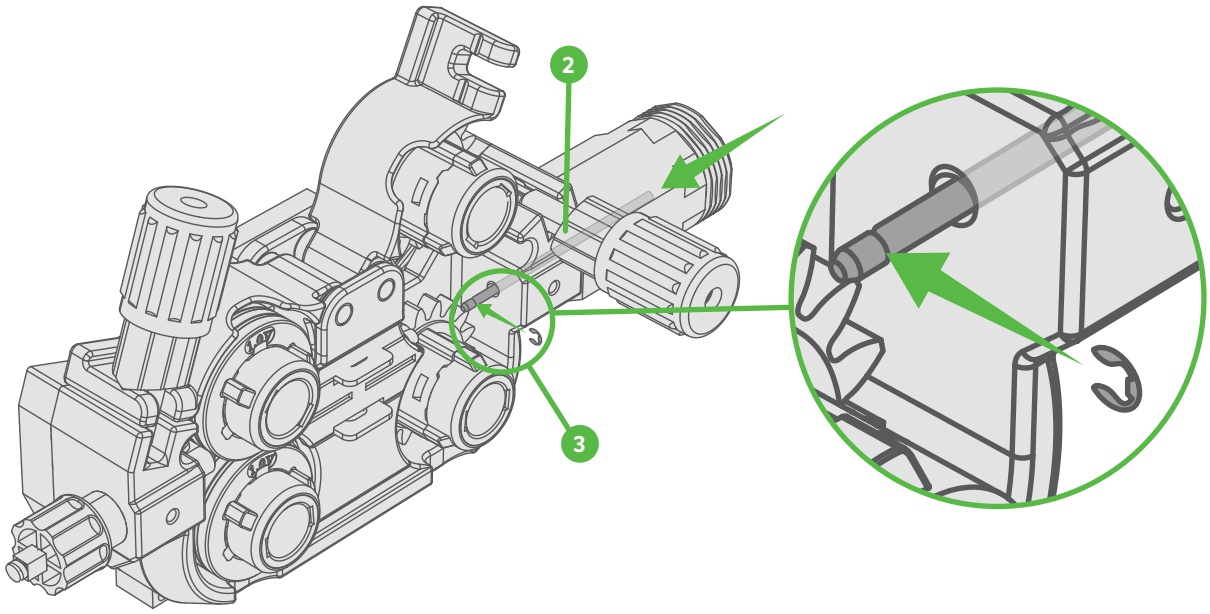

4. Repeat steps 1-3 from *see "To Remove the Guide Tube" on page 42* in reverse to replace the drive rollers and close the wire drive.

6.17 Installing & Replacing the Wire

Make sure you have the correct drive rollers installed for the wire being used.

Install the welding torch before installing the wire spool.

Always check that the drive roller, liner, contact tip and gas nozzle are suitable for the wire being used.

6.17.1 To Install a Wire Spool

1. Unscrew and remove the spool retaining nut.
2. With the retaining nut off, slide the wire spool onto the spool holder.
3. Lock it into place by reinstalling the spool retaining nut.

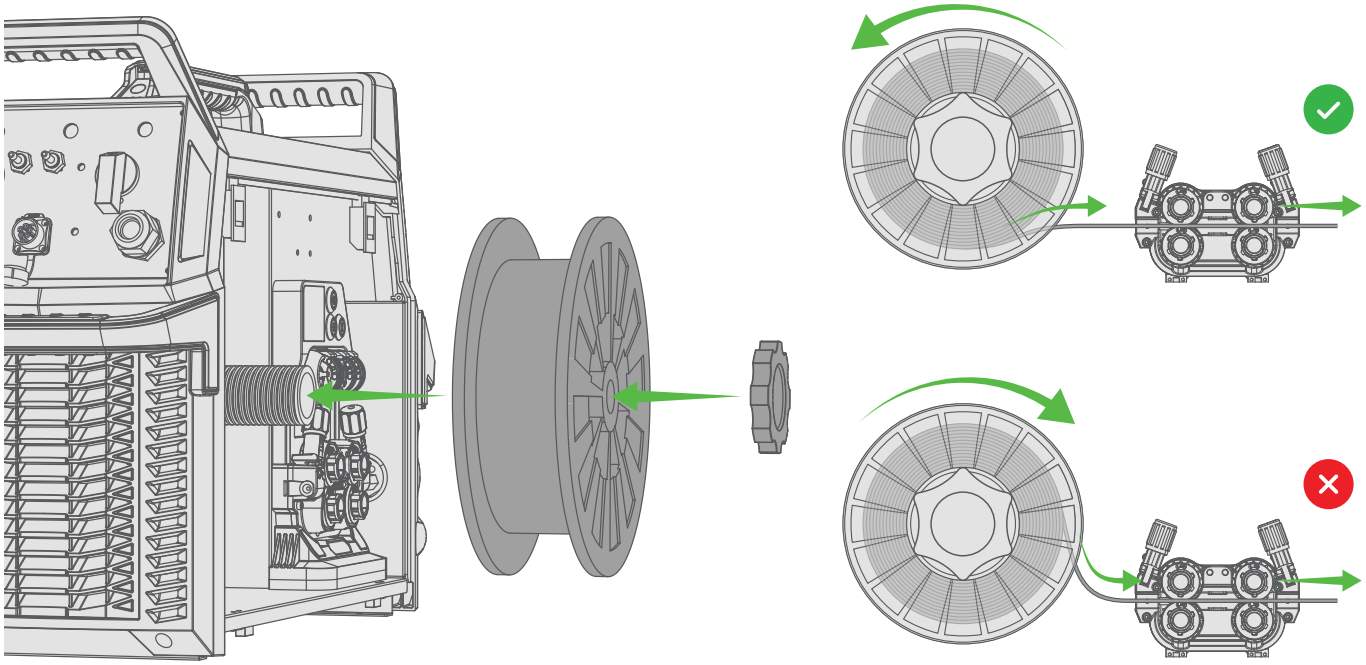

Ensure the wire spool is facing the right direction with the filler wire able to run from the bottom of the spool to the drive rollers.

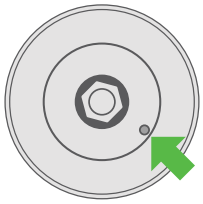

Ensure you line up the keyhole on the spool with the key on the base of the spool holder.

4. Pull down the drive roller tensioner knobs to release the upper wire drive rollers and lift them out of the way.

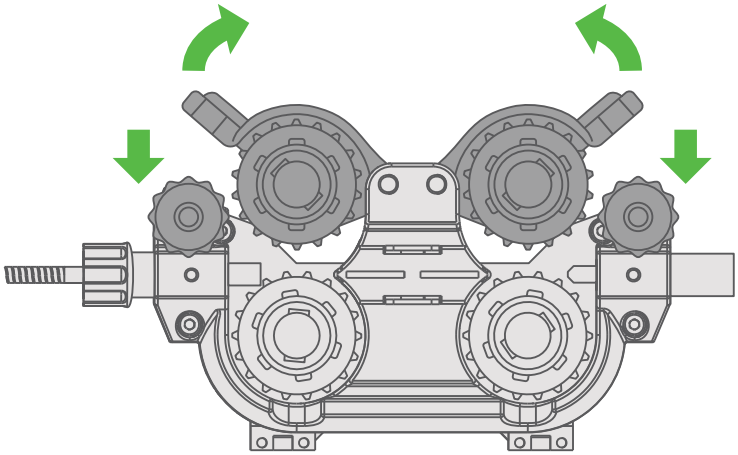

5. Release the filler wire end from the spool and cut off any wire that is deformed and file the end smooth.

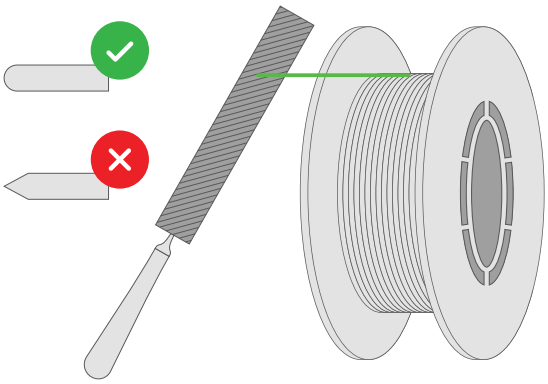

⚠ **Sharp edges on the filler wire can cause damage to the torch liner.**

6. Feed the wire through the inlet guide tube and through to the outlet guide tube. Ensure that the wire passes through the roller's grooves.

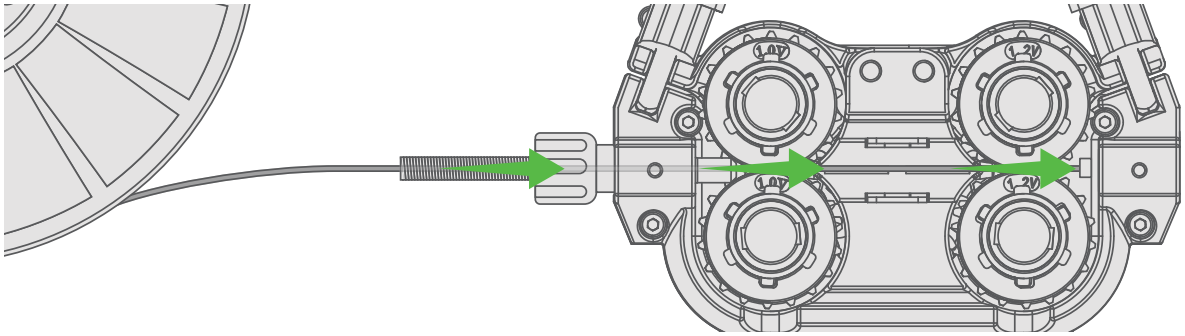

7. Close the upper drive rollers and lift the tensioner knobs back up to lock the wire into place.

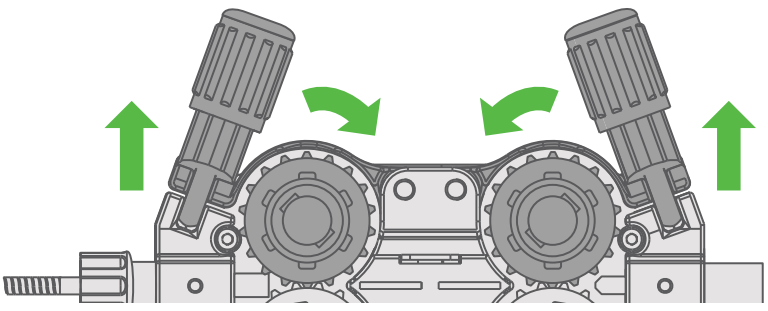

8. Prepare your MIG torch for having wire fed through it by removing the front-end consumables.

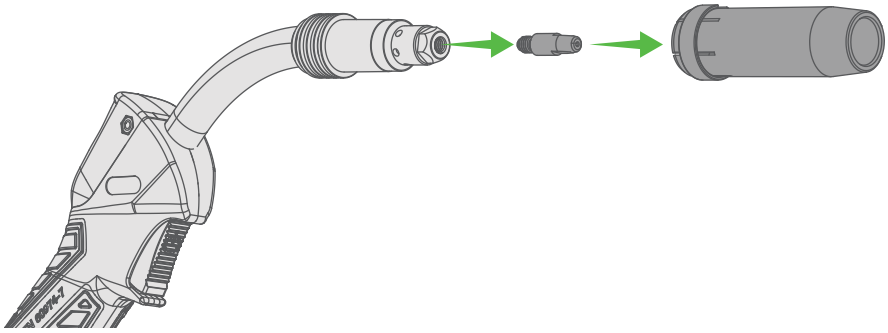

9. Feed the wire through the torch. To do this, press the Wire Inch button inside the machine.

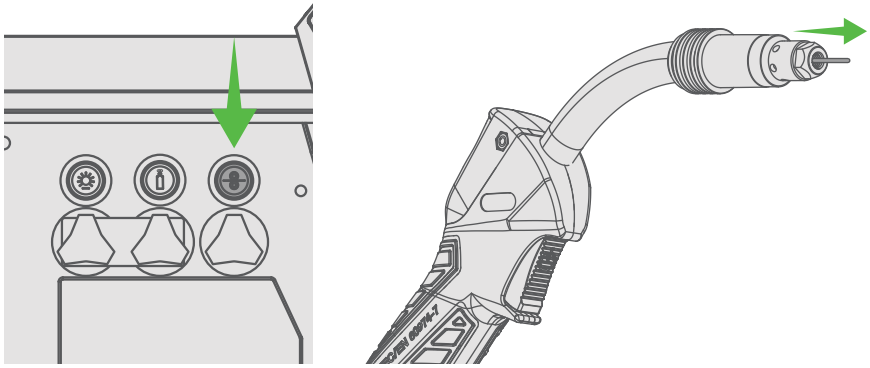

10. Once the wire is fed through the torch, you can replace the torch consumables.

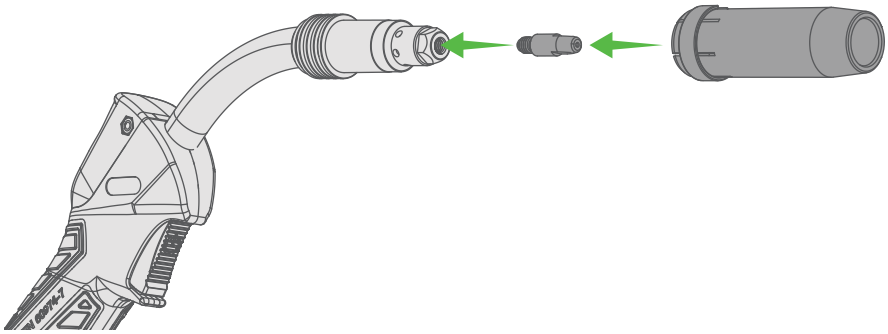

11. Adjust the tension on your drive rollers and wire with the tensioner knobs.

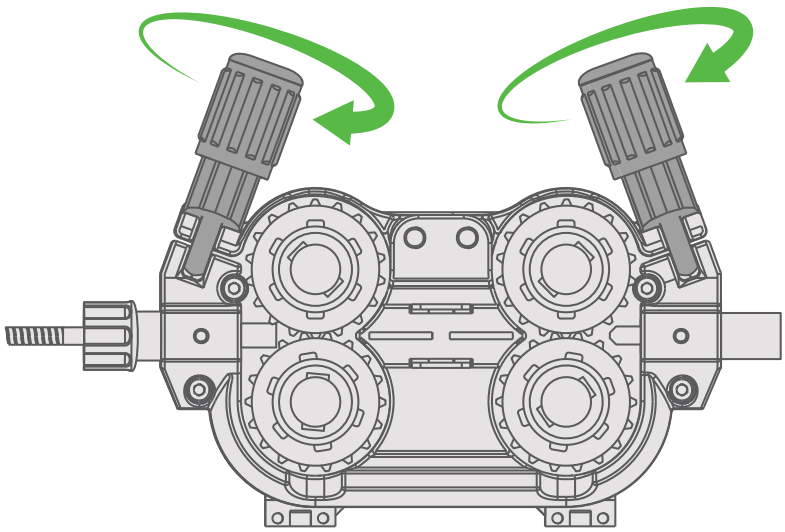

⚠ Excessive tension will deform the filler wire and can damage cored or coated wires.

To manually tension your drive rollers:

a. Start with a cold torch and feed the wire until about 50mm (5cm) hangs out of the end of the torch tip.

b. Decrease the tensioner arm by rotating anticlockwise so that the wire slips (the rollers are spinning, but the wire doesn't move) when the trigger is pulled.

c. Once the tension has been removed, turn the tension level a half-turn clockwise to increase the tension, gripping the exposed wire between thumb and forefinger with light pressure.

Don't grip the wire too hard. The pressure should be firm but not excessive.

d. Pull the trigger while holding the wire. If it slips, repeat the process.

e. Keep adding tension until you can't stop the wire with your fingers, and it feeds smoothly without slipping.

Keep fingers and hands clear of the wire as it feeds from the torch. Pinch the wire from the sides, so nothing is blocking its path as it exits the torch.

6.17.2 Adjusting the Spool Hub Brake

To adjust the spool hub brake, turn the spool nut to control the brake.

1. Turn the spool nut clockwise to increase the brake.

2. Turn the spool nut anticlockwise to decrease it.

The spool nut can be accessed when the retaining nut is removed from the spool holder.

The brake is properly adjusted when the spool stops within 10mm to 20mm (measured at the outer edge of the spool) after the MIG torch trigger is released. The wire should be slack without coming off the spool.

Too much tension on the brake can cause rapid wear of the drive roller motor, overheating of the electrical components and could increase the chances of the filler wire burning back into the contact tip.

6.17.3 To Remove the Wire Spool

1. Unscrew and remove the spool retaining nut.

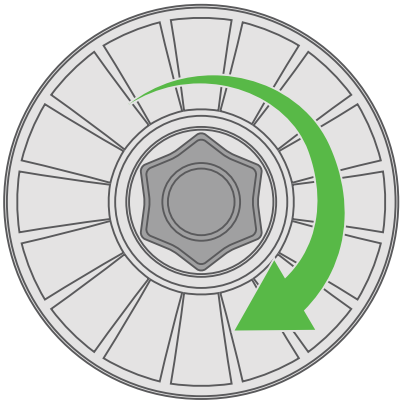

2. Cut the wire behind the inlet guide and hold the end while removing the wire spool from the machine.

Letting go of the loose wire before reattaching it will cause it to unspool and lose its precision winding, rendering it unusable.

3. Remove the filler wire from inside the welding torch and drive rollers.

6.17.4 To Install a Wire Spool in the Spool Gun

1. Unscrew the spool holder and remove the spool housing cover.

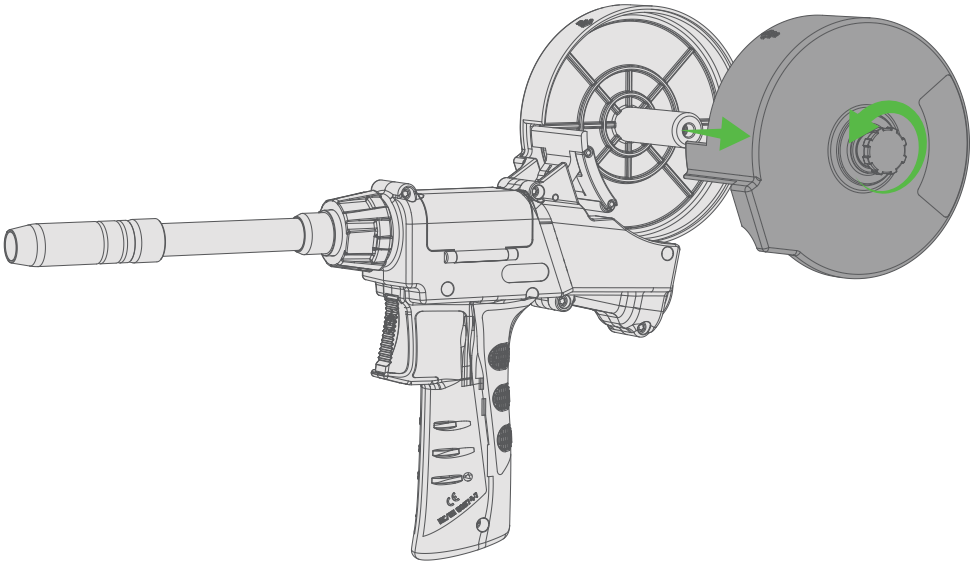

2. Push back the spool guides, and place the wire spool onto the spool nut.

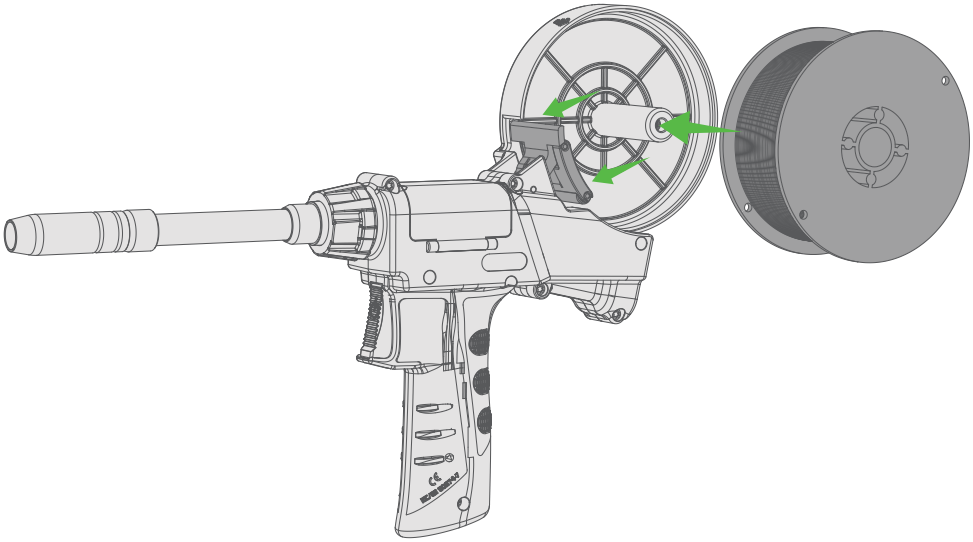

3. Feed the wire through the inlet guide tube.

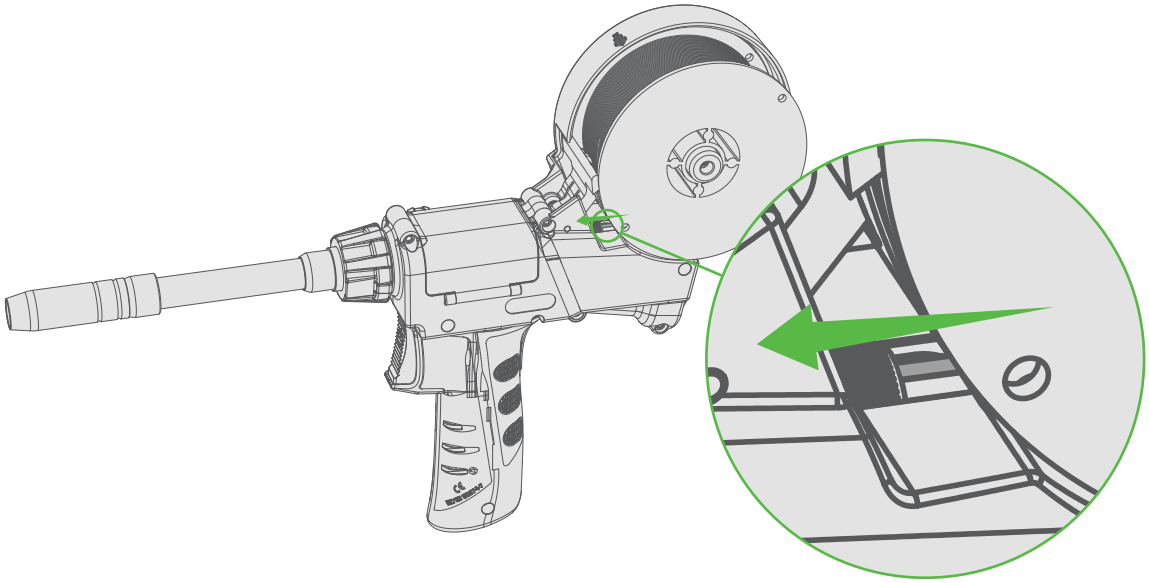

4. Open the drive roller cover, and loosen the roller tension knob.

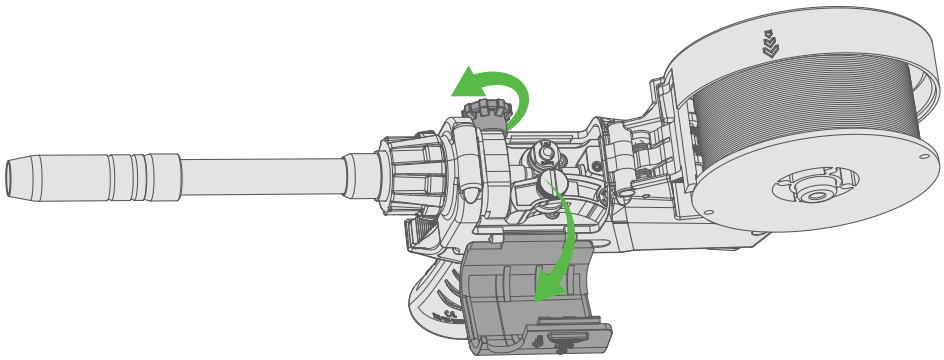

5. Lift the roller lock up and open the wire drive.

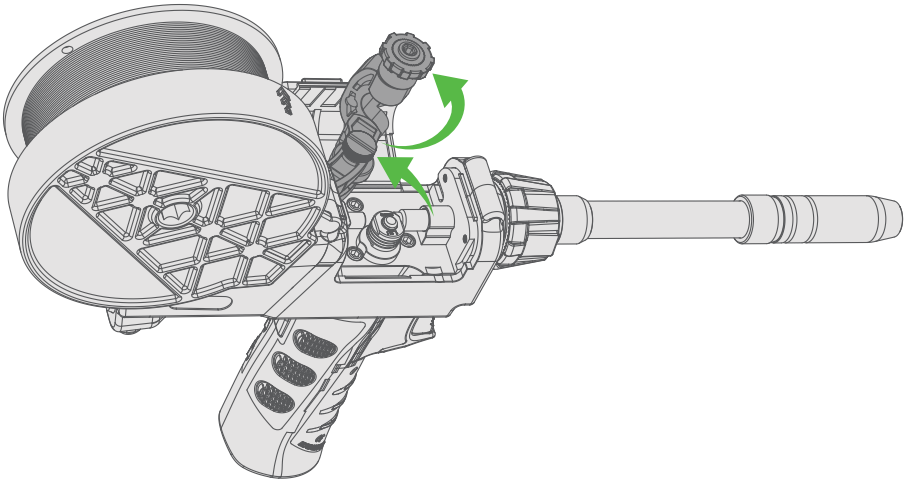

Ensure you have the correct drive roller for the wire size you are using. If not, replace it with the correct size.

6. Feed the wire through the drive roller and through the outlet guide tube.

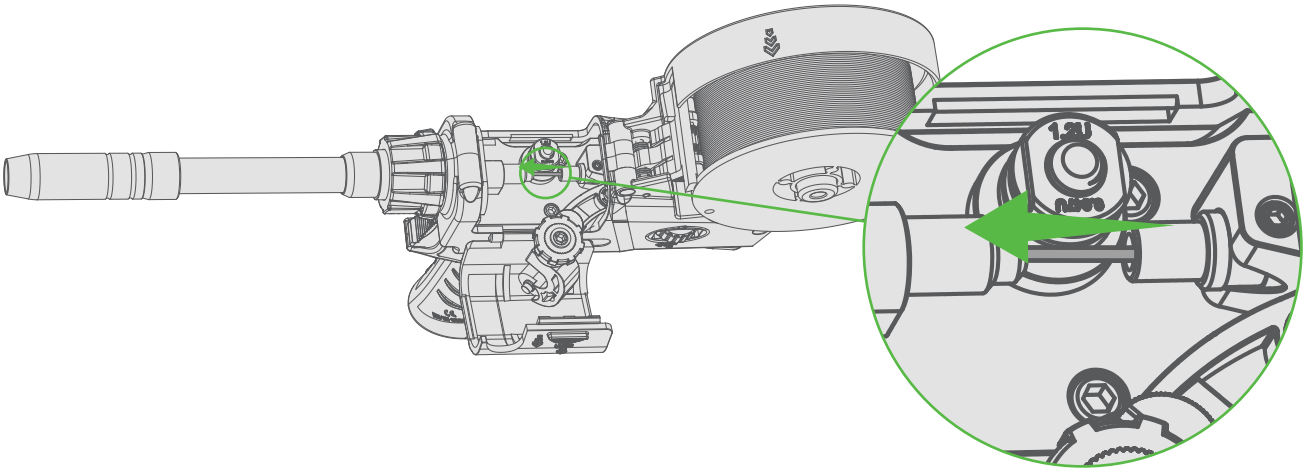

7. Close the wire drive, tighten the roller tension knob and close the drive roller cover.

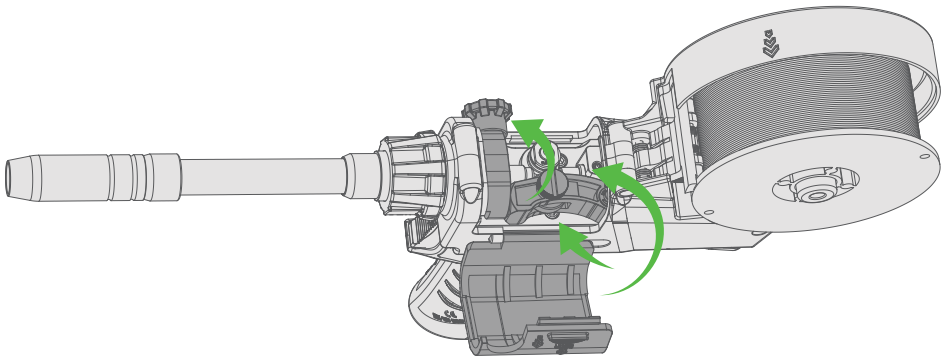

8. Remove the front-end consumables in preparation for feeding the wire.

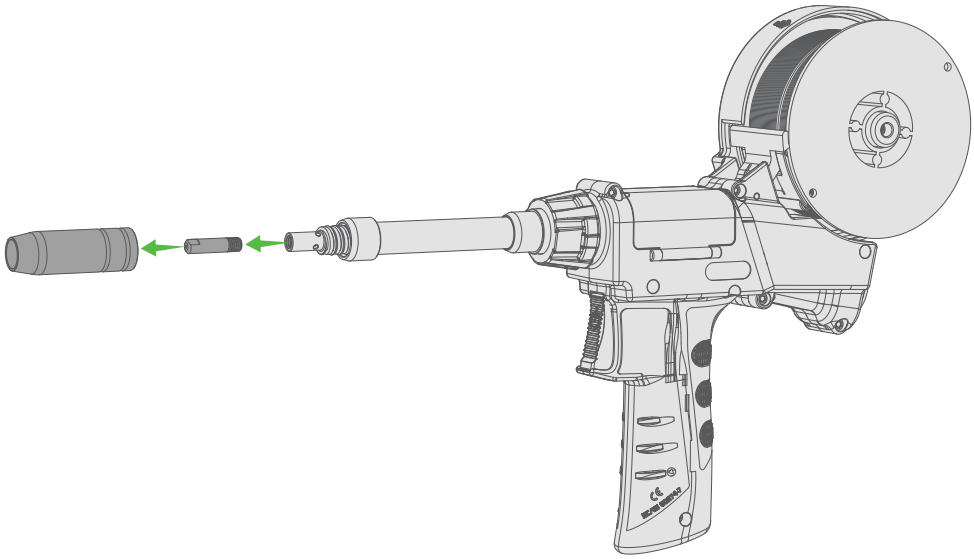

9. Press the torch trigger to feed the wire out of the torch nozzle.

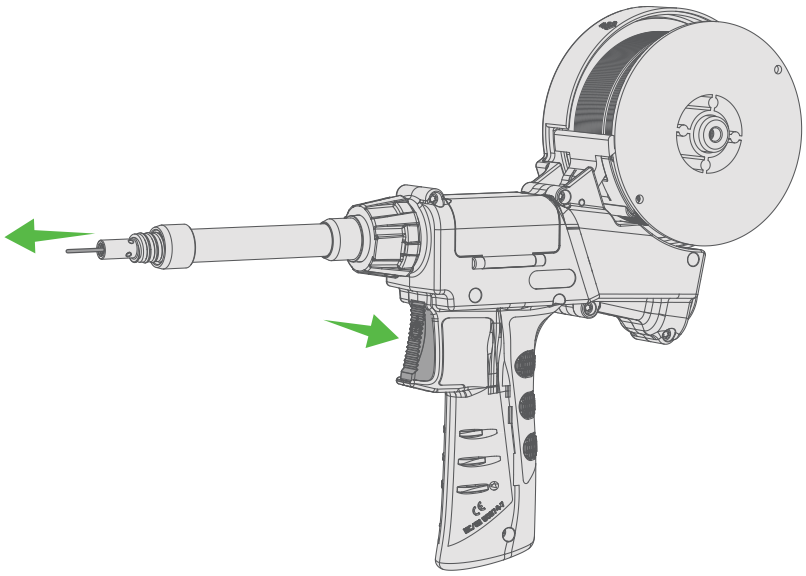

10. Replace the front-end consumables.

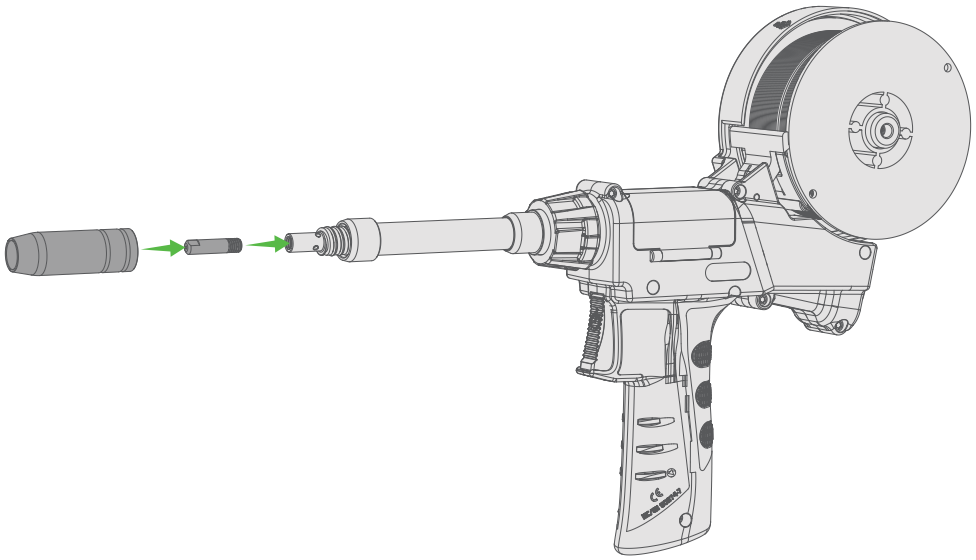

11. Replace the spool housing cover and tighten it.

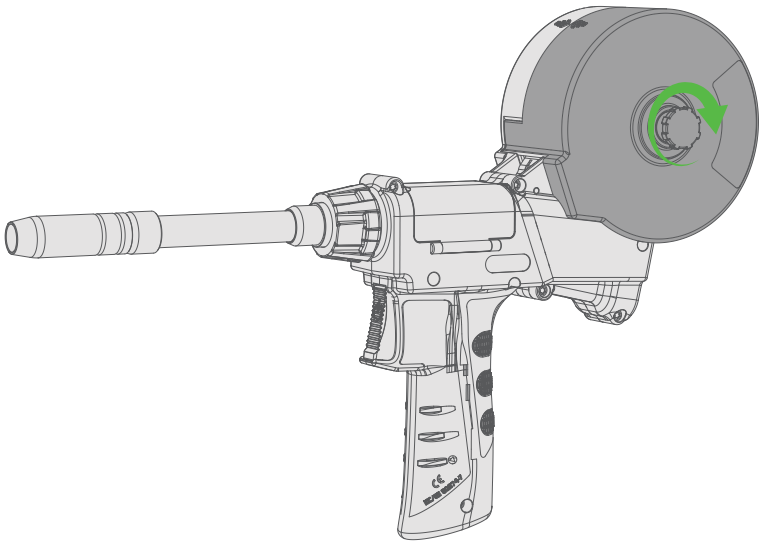

6.17.5 To Feed Wire Through the Push-Pull Gun

1. Open the drive roller cover and loosen the roller tension knob.

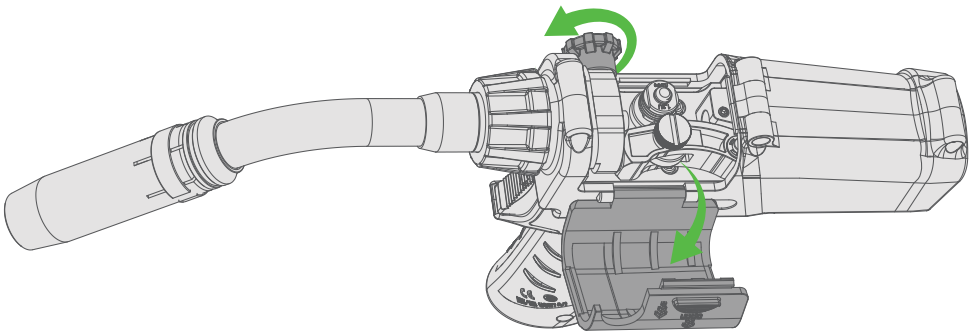

2. Lift the roller lock up and open the wire drive.

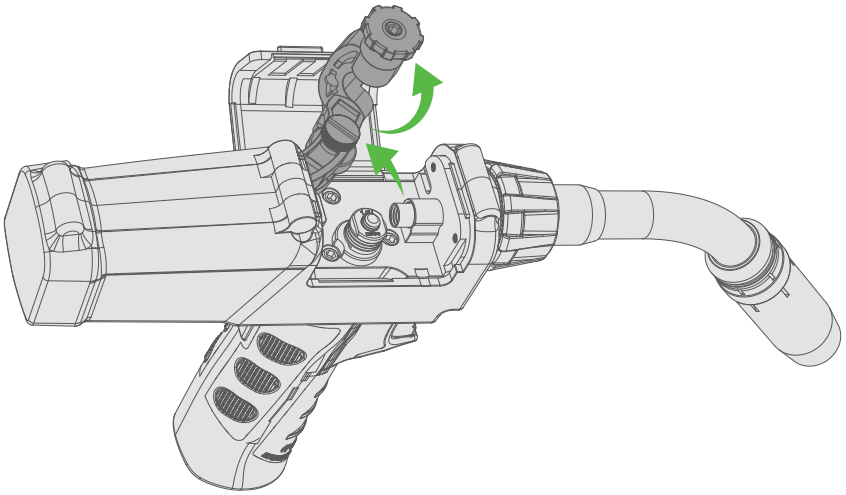

3. Feed the wire through the drive roller and through the outlet guide tube.

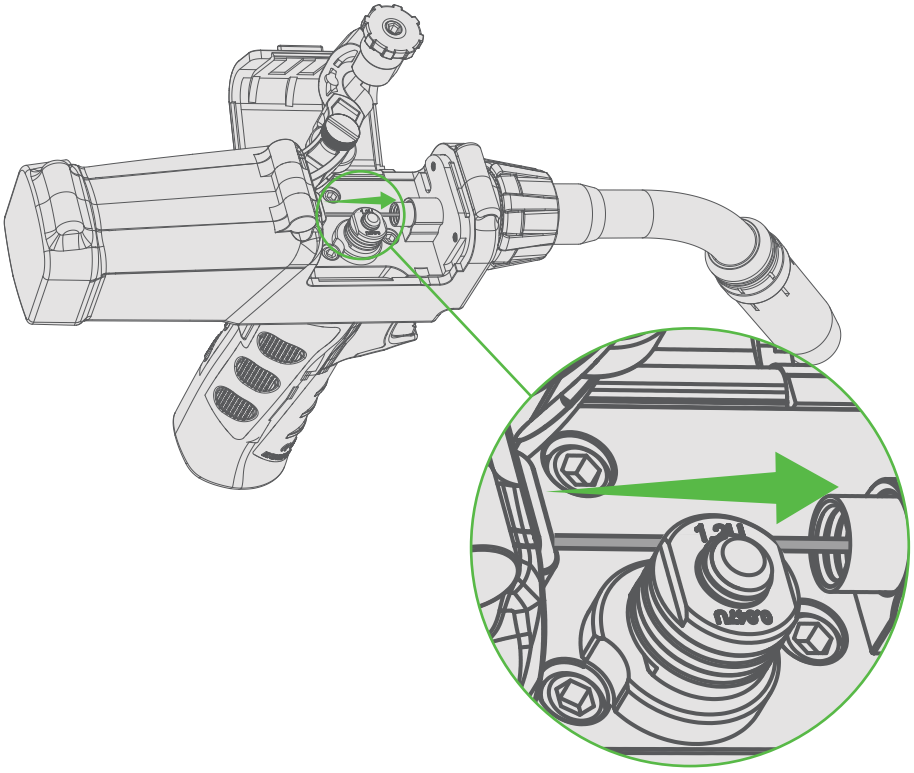

4. Close the wire drive, close the drive roller cover and tighten roller tension knob.

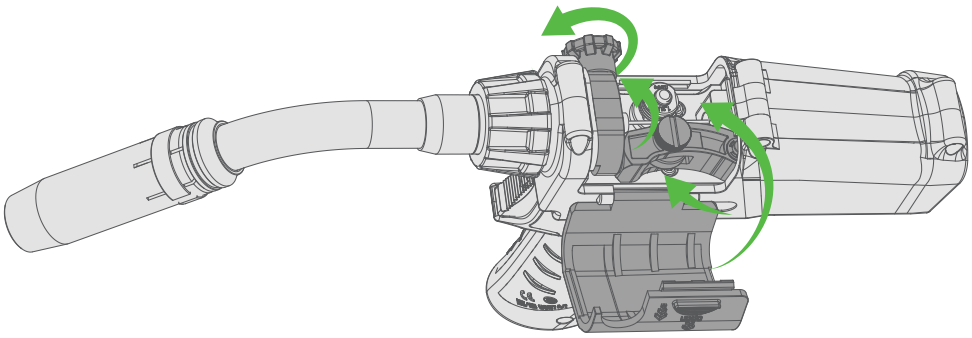

5. Remove the front-end consumables in preparation for feeding the wire.

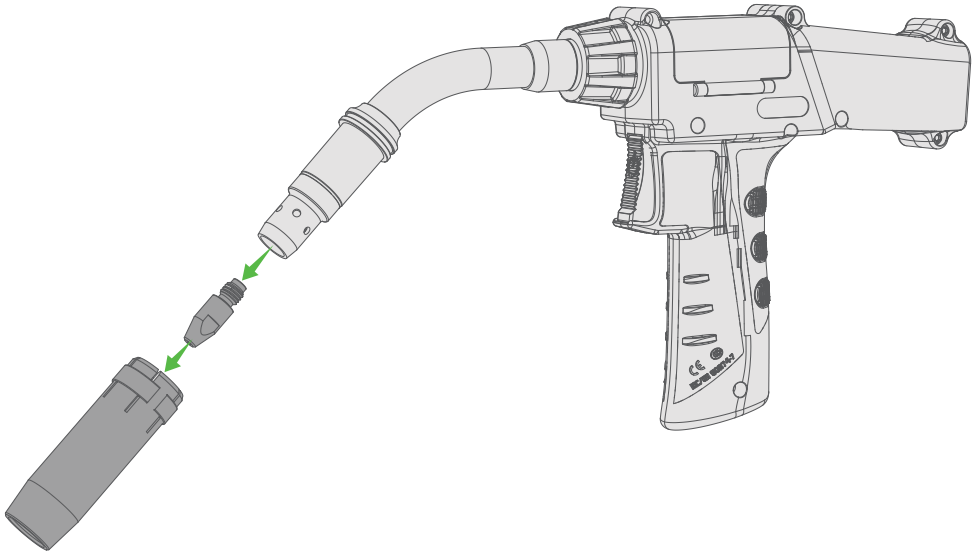

6. Press the torch trigger to feed the wire out of the torch nozzle.

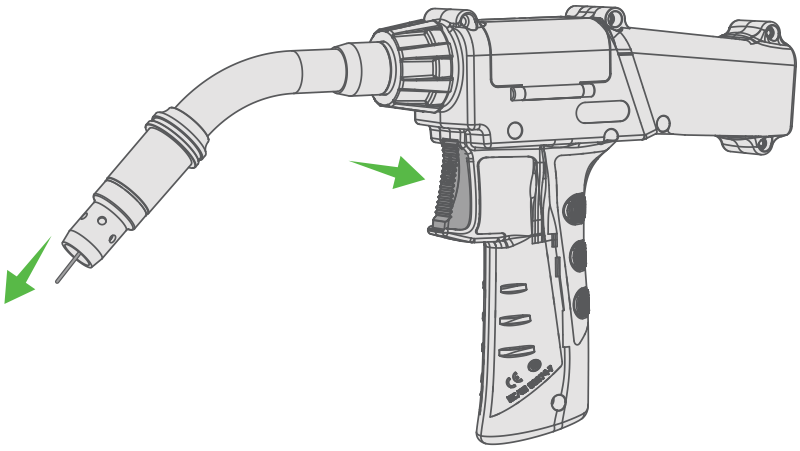

7. Replace the front-end consumables.

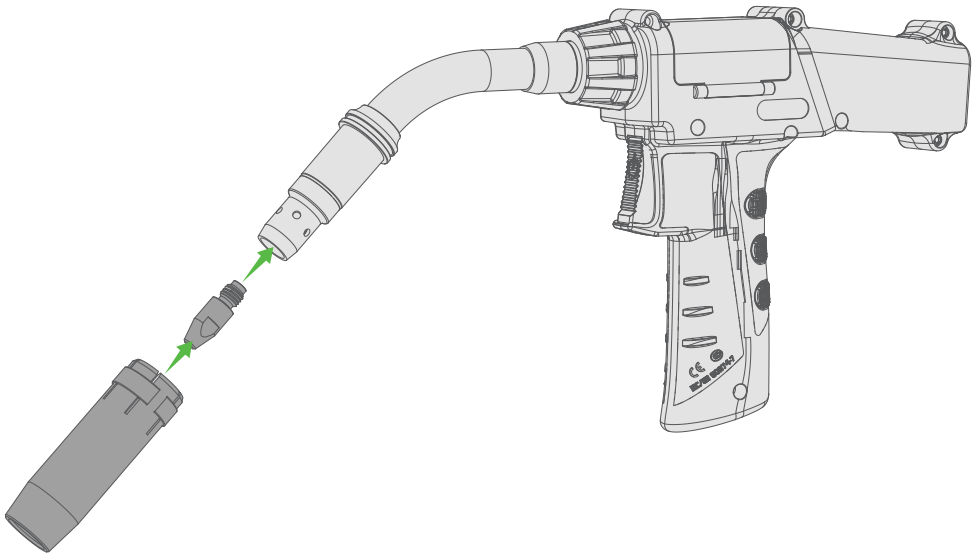

6.18 Installing & Replacing the Torch Liner

UNIMIG MIG torches are delivered with a torch liner preinstalled.

The torch liner is a consumable part which will need to be replaced when it becomes worn or damaged, or if the filler wire material and/or diameter changes. The previous filler wire will need to be removed before the liner can be replaced.

If the filler wire material or diameter is changed, ensure the correct driver rollers are installed to suit.

6.18.1 Steel Liner

1. Remove the nozzle, contact tip, tip holder and insulator from the front end of the torch.

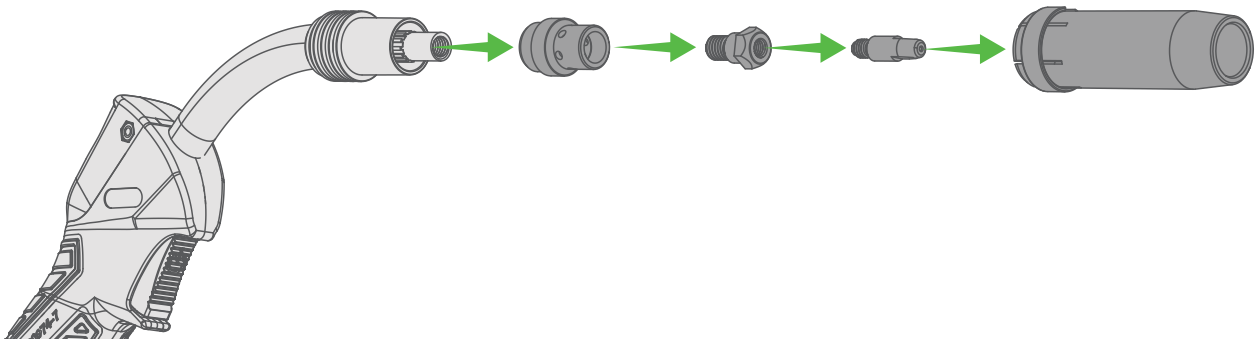

2. Remove the liner retaining nut from the end of the torch.

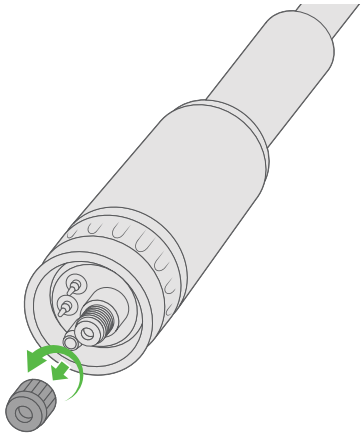

3. Remove the existing liner. Make sure the MIG torch is laid out straight when you do this.

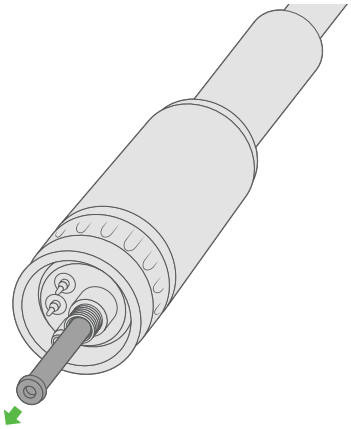

4. Install the new liner down the torch lead to the end of the torch neck.

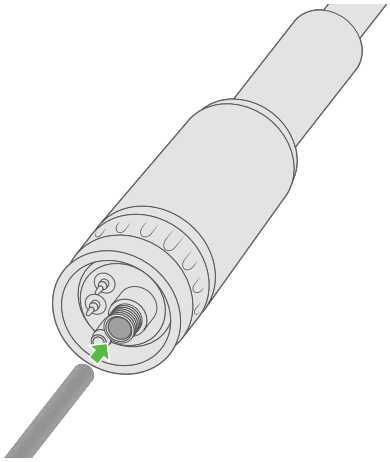

5. Fit the liner retaining nut and screw it halfway down. Don't tighten it yet.

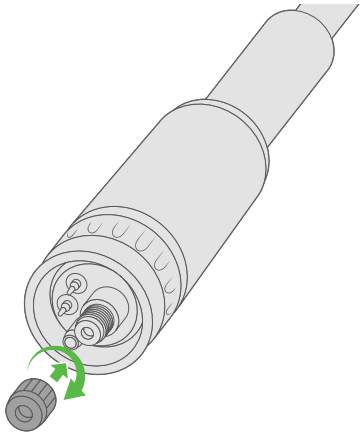

6. Cut the excess liner off so it's just below flush with the torch neck. The liner should line up with the bottom of where the tip holder screws in.

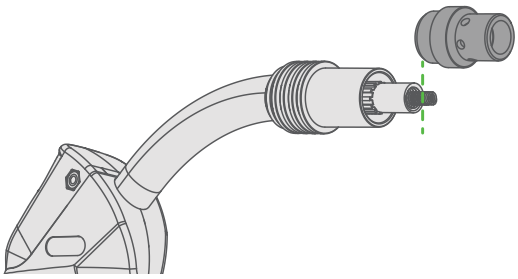

Remove any sharp edges that could potentially damage the filler wire.

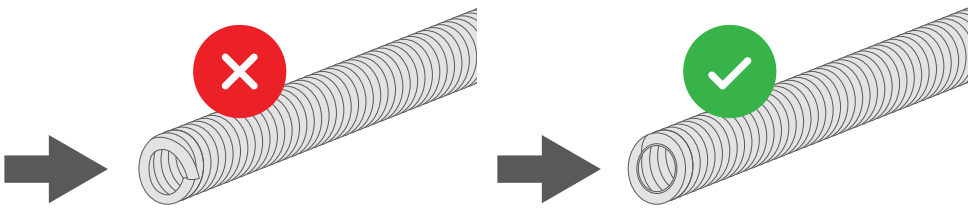

Don't cut the liner too short, leaving a gap between the liner and tip holder inside the torch can cause wire feeding issues.

7. Replace the front-end consumables on the torch. If you can't screw the tip holder back into place, the liner is too long and needs to be trimmed.

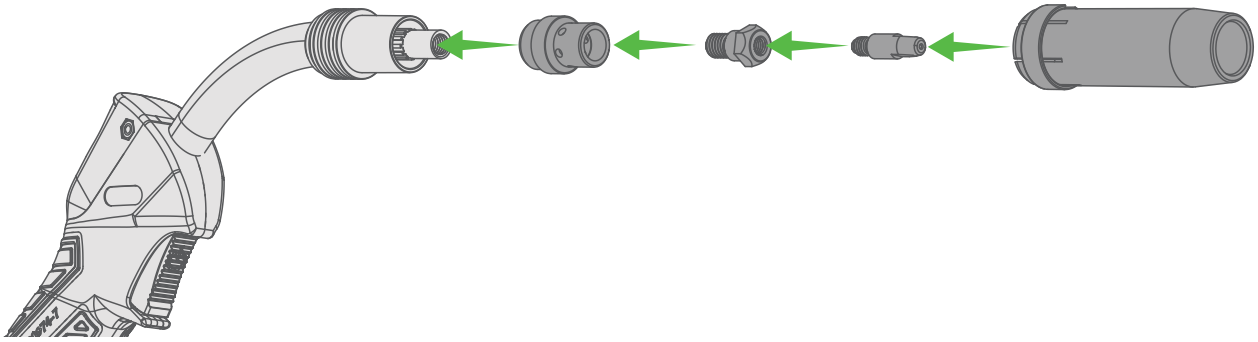

8. Fully screw down the liner retaining nut.

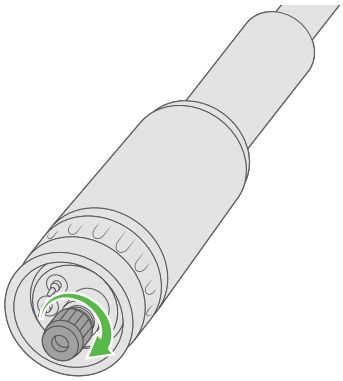

6.18.2 Aluminium Liner

1. Remove the nozzle, contact tip and tip adapter from the front end of the torch.

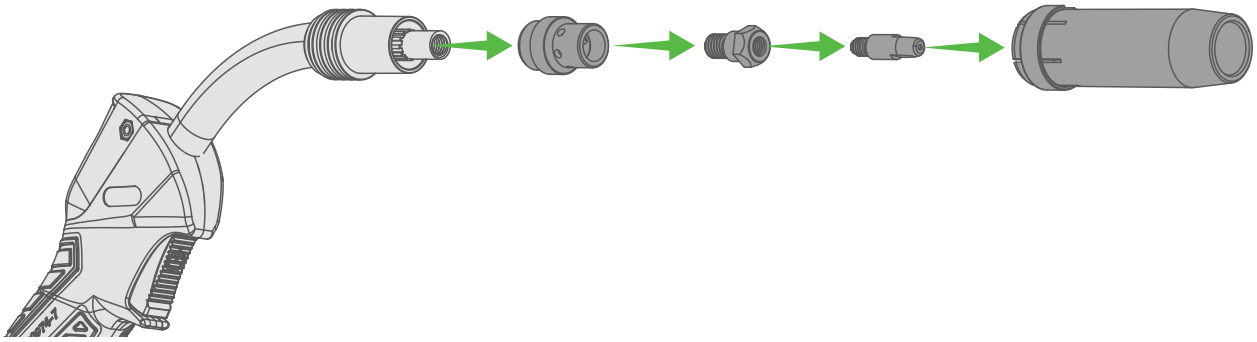

2. Remove the liner retaining nut from the end of the torch.

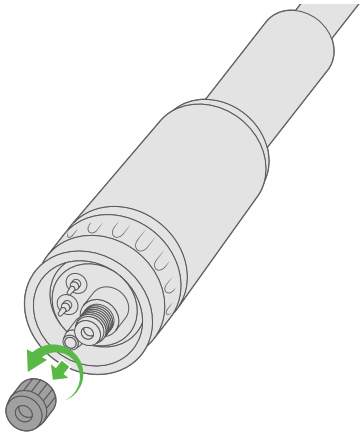

3. Remove the existing liner. Make sure the MIG torch is laid out straight when you do this.

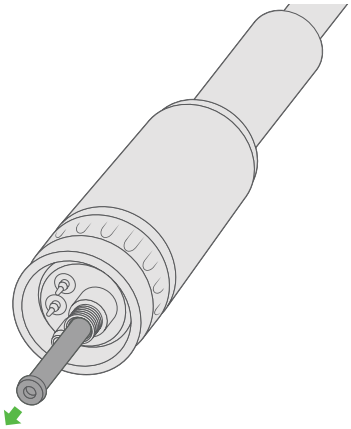

4. Screw the neckspring onto the end of the liner.

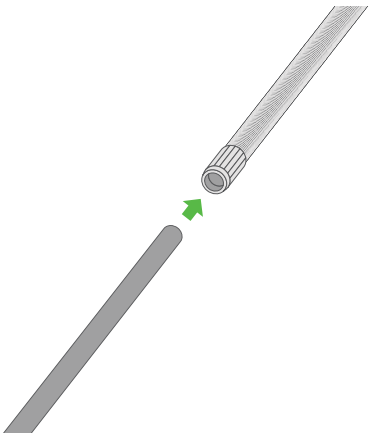

5. Install the new liner down the torch lead to the end of the torch neck until it butts up against the tip holder internally.

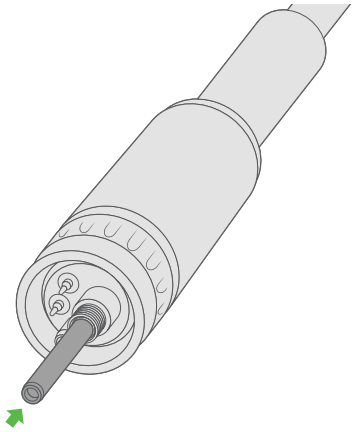

6. Place the collet and o-ring (from inside the retaining nut) onto the end of the liner to crimp it in place, and then lock it into place with the retaining nut.

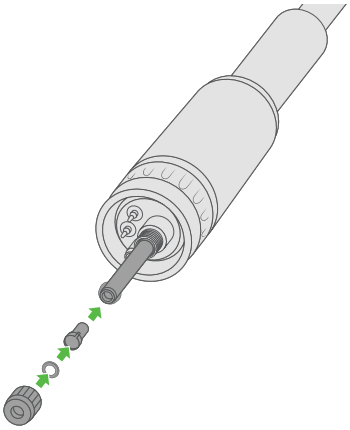

7. Cut the excess liner off so that the liner goes through the Euro connection and sits just before the drive rollers.

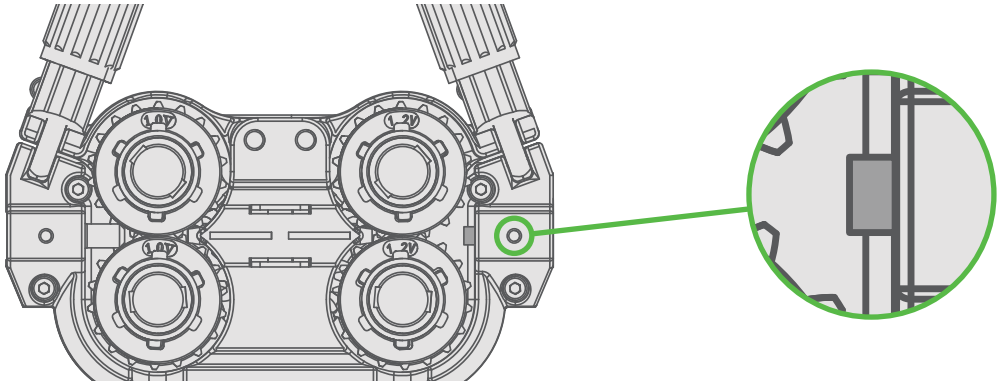

The liner should be as close to the drive roller as possible without touching it.

8. Replace the front-end consumables on the torch.

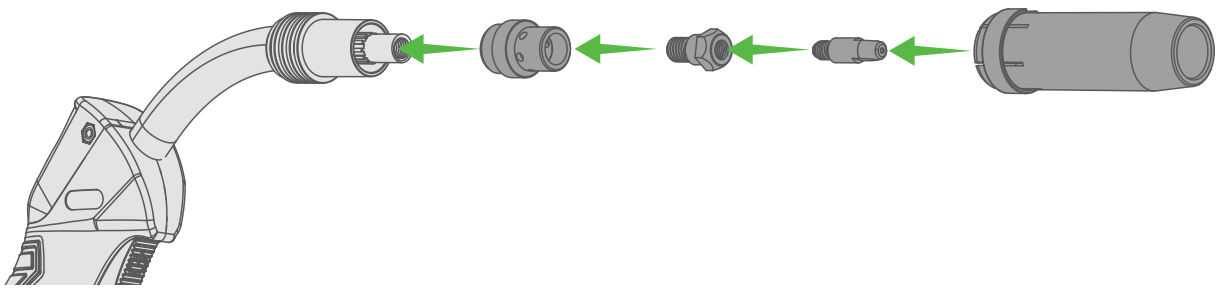

6.19 Installing the Gas Bottle & Testing the Gas Flow

Handle the gas bottle with care. There is a risk of injury if the gas bottle or the bottle valve is damaged.

If you have a new gas bottle, remove the insert tab from the valve.

1. Securely fasten the gas cylinder to a wall or stationary support so it can't fall.
2. Stand to the side and open the gas bottle valve or safety lock quickly to blow away any dirt or dust from it before closing it again.
3. Screw in your regulator or flowmeter so that the face of the gauge is vertical, and then tighten it with a wrench.
4. Connect the gas hose to the regulator/flowmeter outlet connection and the gas fitting on the back of the machine.
5. Open the gas bottle valve or safety lock and adjust your flow rate using the gas flow regulation screw.

When turning the gas flow regulation screw, do it slowly. Cranking the screw can damage the regulator/flowmeter and cause gas leakage.

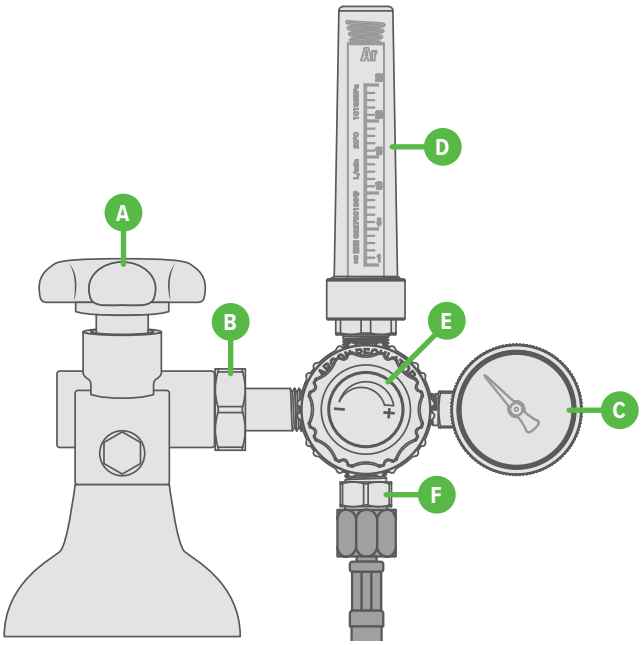

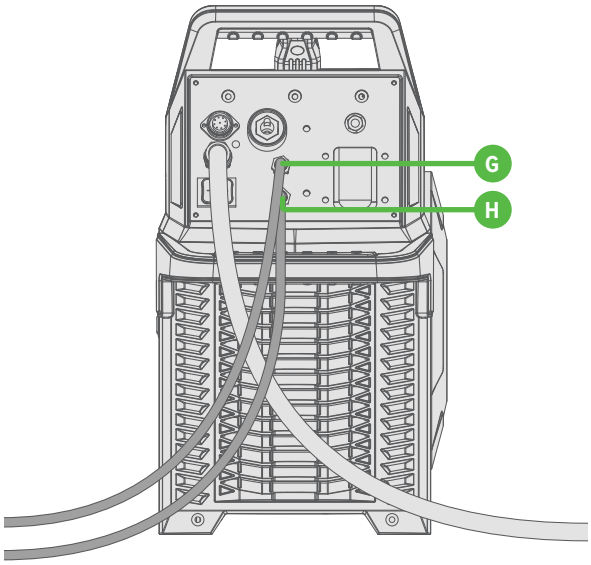

A. Gas bottle valve
B. Inlet connection (AS2473 Type 10)
C. Gas bottle contents indicator
D. Gas flow meter
E. Gas flow regulation screw
F. Outlet connection (5/8" UNF Male RH)
G. Machine MIG gas fitting (6mm quick-connect barb)
H. Machine TIG gas fitting (6mm quick-connect barb)

Recommended Gas Flow Rates

Gas Mixture	TIG	MIG
Argon	5-15L/min	10-25L/min
Helium	5-15L/min	
Argon + 18-25% CO_2		10-25L/min
CO_2		10-25L/min

The gas flow rates mentioned are intended as guidelines only. Actual gas flow rates may vary based on the specific gas cup selected.

6.19.1 Testing the Gas Flow

Testing the gas flow via an external gas test is recommended as the gas solenoid in the machine can cause a small loss of gas as it travels through the machine internals. A gas test lets you check the difference in the flow rate selected on the regulator/flowmeter and the flow exiting the torch.

1. Open the gas bottle valve.
2. Connect a gas flow tester to the end of the torch and start the gas flow by pressing the gas flow test button inside the machine.
3. Check the gas flow tester is reading the gas flow rate selected.

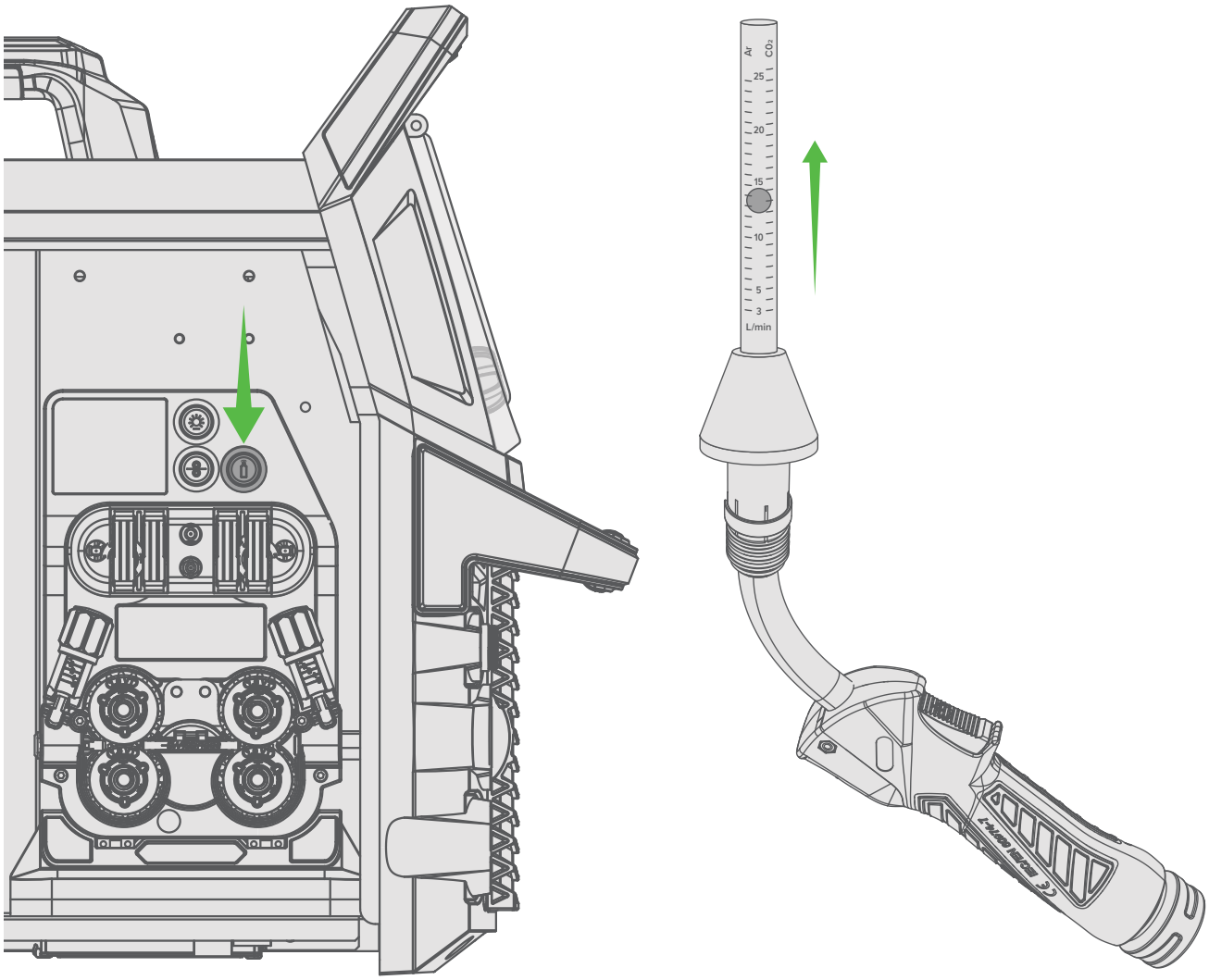

6.20 Regulator Safety & Operation

⚠ **This equipment is designed for use with welding grade (inert) shielding gases only.**

This regulator/flowmeter is designed to reduce and control the flow of high-pressure gas from a cylinder down to a level that is suitable for the equipment it's supplying. Make sure the pressure regulator is designed for use with high pressure gas cylinders and that the connection nut thread matches the cylinder valve outlet.

Misuse of the equipment can lead to dangerous situations, which could result in accidents. It is crucial for users to avoid such scenarios. Prior to operating or handling the equipment, it is imperative to understand and adhere to the safety guidelines provided in this manual.

The following instructions detail specific practices for using regulators/flowmeters:

1. Do not expose the regulator/flowmeter to inlet pressures exceeding its maximum specified limit.
2. Do not pressurise a regulator/flowmeter if it exhibits any signs of damage, loose components, or appears to be in poor condition.
3. Do not attempt to loosen or detach any parts from the regulator/flowmeter without first ensuring the gas pressure has been fully released. Pressurised gas can forcefully eject a dislodged part, creating a hazard.
4. Do not open the cylinder unless a pressure regulator/flowmeter has been fitted.
5. An opened valve should never be fully opened until resistance is encountered, but should be turned back at least half a turn to prevent the valve from becoming stuck in the open position. This can occur if the valve is left open for long periods of time.
6. Ensure the cylinder valve is fully closed and any gas within the regulator/flowmeter's high and low-pressure chambers has been vented before removing the device from a cylinder.
7. Do not use the regulator/flowmeter as a shut-off valve. To prevent gas flow when downstream equipment is not in use for an extended period, turn off the gas at the source and vent it from the system.
8. Open the cylinder valve slowly and make sure to close it after finishing. When you shut the valve, turn it just enough to stop the gas completely. Do not over tighten.
9. Do not attempt to repair or modify the regulator.

⚠ **DO NOT USE OIL**

Never use oil, grease, or other petroleum-based substances on or near this regulator. The presence of oil can cause serious safety hazards, especially when regulators are used in applications involving high-pressure gases. Even with inert gases such as argon, contamination can lead to equipment malfunction, seal degradation, and dangerous cross-use if the regulator is later connected to flammable or oxidising gases. Always ensure all connections, fittings, and threads are clean and completely free of oil or grease before use. Failure to comply with this warning can result in fire, explosion, serious injury, or death.

User Responsibilities

This equipment will perform safely and reliably only if it is installed, operated, maintained, and repaired strictly according to the provided instructions. Regular checks are essential to ensure its ongoing safe and reliable operation.

Any necessary repairs, replacements, or adjustments must be carried out promptly. Do not use equipment that is defective. Immediate replacement is required for parts that are broken, missing, visibly worn, deformed, or contaminated.

Typically, the user will bear exclusive responsibility for any malfunctions resulting from improper usage, inadequate maintenance, or repairs conducted by individuals other than certified repair technicians.

Installation

Before connecting a pressure regulator to a full cylinder always screw out (anticlockwise) the regulation screw. This ensures that there will be no gas flow through the regulator upon initially opening the cylinder valve, reducing strain on the regulator's internal safety component (known as a diaphragm) and increasing the lifespan of the regulator.

Remove the plastic dust seal from the cylinder valve. Before attaching the regulator/flowmeter, ensure the cylinder valve outlet is free from any impurities that could block the orifices or damage the seats. Briefly open then immediately close the valve, directing the outlet away from both people and any potential sources of ignition. Clean the outlet with a lint-free cloth.

If grit, dirt, oil or dirty water enters the cylinder valve outlet, this may cause damage to the valve internals and result in leakage.

Match the regulator/flowmeter to the cylinder. Never connect a regulator/flowmeter designed for a particular gas or gases to a cylinder containing any other gas.

1. Attach the inlet of the regulator/flowmeter to the cylinder, securing it snugly with a proper wrench, but avoid over-tightening. Regulator connections can be fully threaded in by hand and then only require a fraction of a turn to achieve a gas tight seal.

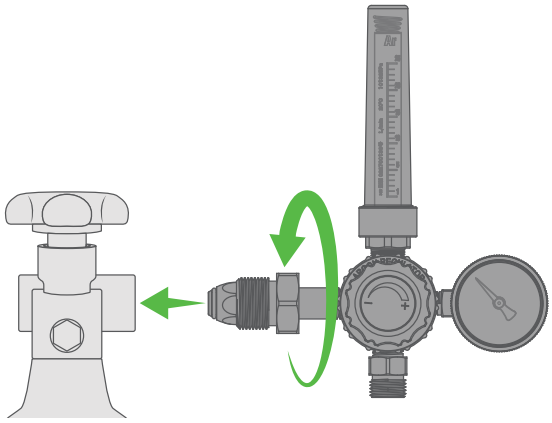

2. Secure the outlet hose tightly, then connect any downstream equipment.

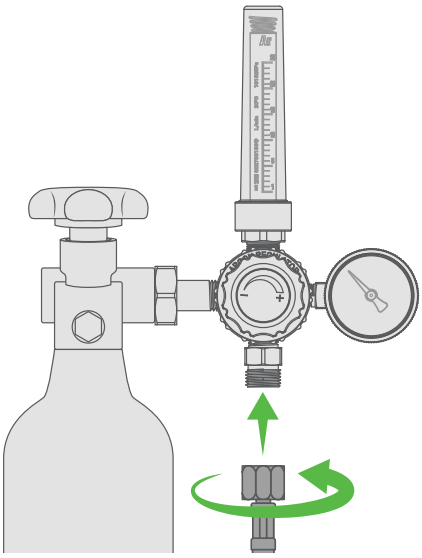

For downstream equipment that is sensitive, consider the installation of an additional safety device if the regulator/flowmeter does not include a built-in pressure relief feature.

Operation

Once the regulator/flowmeter is connected to the cylinder with the regulation screw completely disengaged, follow these steps to pressurise:

1. Position yourself to the side of the regulator/flowmeter and gradually open the cylinder valve. Rapid opening can cause a sudden pressure increase, potentially damaging the internal components of the regulator/flowmeter.

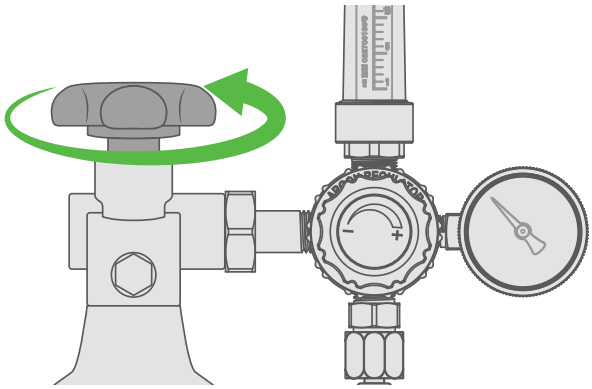

2. Ensure all valves on the downstream equipment are closed, then set the regulator/flowmeter to the desired working pressure.

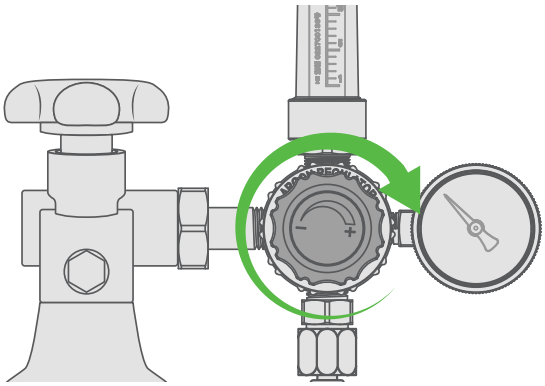

It's advisable to perform a leak test at the connection points of the regulator/flowmeter using an appropriate leak detection solution or soapy water.

3. Purge any air or non-essential welding grade shielding gas from the system attached to the regulator/flowmeter by briefly opening and then closing each control valve. The duration of the purge process could last as long or longer than ten seconds, depending on both the length and diameter of the hose being cleared.

Do not purge flammable or oxidising gases when flames, lit cigarettes, or other sources of ignition are present. Open each downstream valve in turn, closing each valve before opening the next if more than one regulator is being used. This prevents explosive gas mixtures from occurring in the gas hose between regulators and equipment.

4. Close all valves after purging and test all connections for leaks. Use an appropriate leak detection solution or soapy water.

Never use flames to locate gas leaks.

To adjust the operational flow rate of the regulator/flowmeter:

1. Slowly turn the regulator/flowmeter's regulation screw (clockwise) until the outlet gauge shows the desired flow rate.

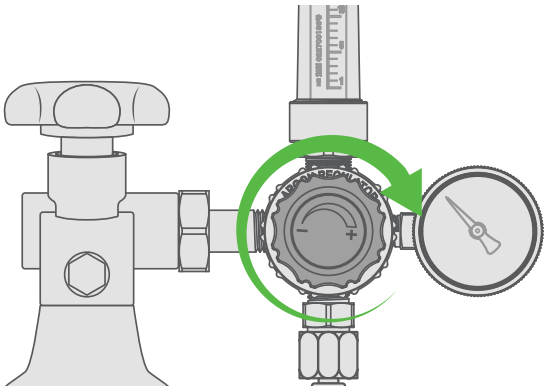

It might be necessary to re-evaluate the flow rate of the shielding gas through the regulator/flowmeter after completing an initial series of welds, as back pressure within the shielding gas hose assembly can affect readings.

2. To decrease the flow rate, first ensure the welding-grade shielding gas is safely vented from the regulator/flowmeter by opening the downstream valve. Direct the released gas to a well-ventilated area, away from any potential sources of ignition. Then, adjust the screw (anticlockwise) until the gauge reflects the desired flow rate. Finally, shut the downstream valve.

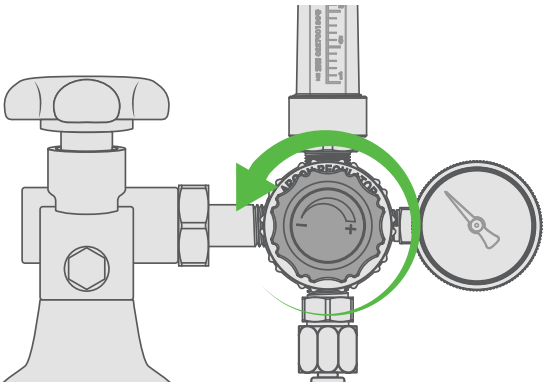

Shutdown

Always close the cylinder valve when the regulator/flowmeter is not in use. For shutdowns lasting longer than 30 minutes, follow these steps:

1. Close the gas cylinder or upstream valve.

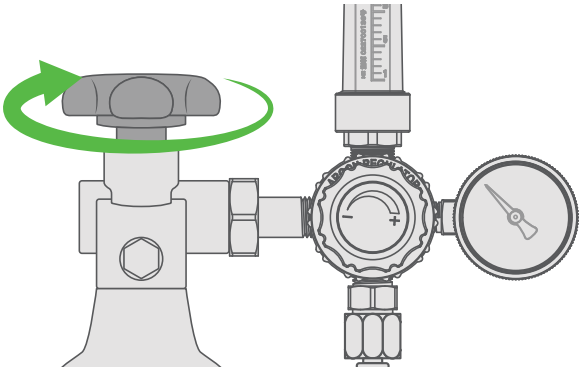

2. Open downstream equipment valves to purge the lines, directing the gas to a well-ventilated area, and away from ignition sources.

3. Once the gas is fully vented, turn the regulation screw to its closed position and close the valves on the downstream equipment.

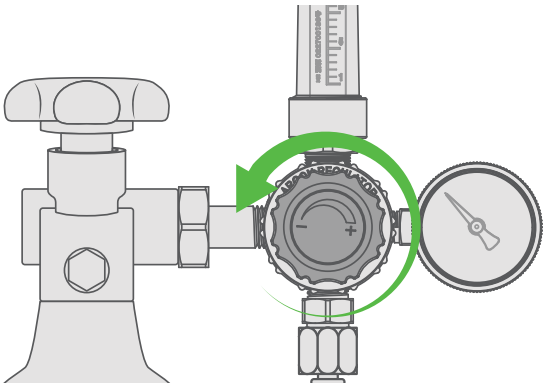

4. Prior to moving cylinders that are not fixed on a specifically designed trolley, detach the regulators/flowmeters.

6.21 Connecting an External Air Compressor

The air compressor will need to have a minimum airflow draw that matches the plasma cutter's. It is recommended to get an air compressor with an additional 20% capability to eliminate bottlenecking and airflow issues.

1. Connect the air compressor to the back of the plasma cutter. The machine has a ¼" Nitto fitting.
2. Set the air pressure on the compressor. It is recommended to set the air pressure slightly higher than the plasma cutter's to allow for any drops in pressure depending on the hose length.

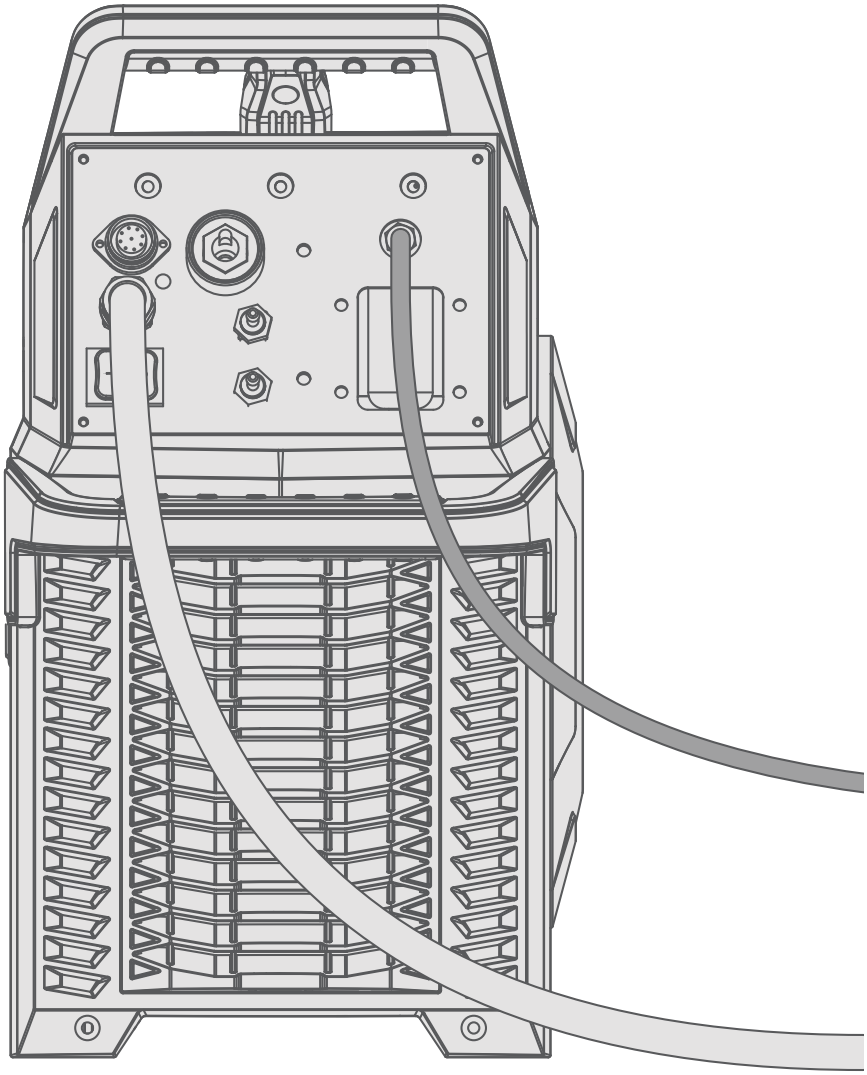

6.22 Installing Additional Air Filters

If the supplied air quality is poor or there is moisture present, the cut speeds, cut quality, and thickness capabilities all decrease, and the life of the consumables shortens. To avoid these issues, install an (optional) additional air filtration system.

Additional air filters should be installed between the air supply and the plasma cutter.

1. Connect the filter to the air hose.
2. Connect the filter to the plasma cutter via a second air hose.

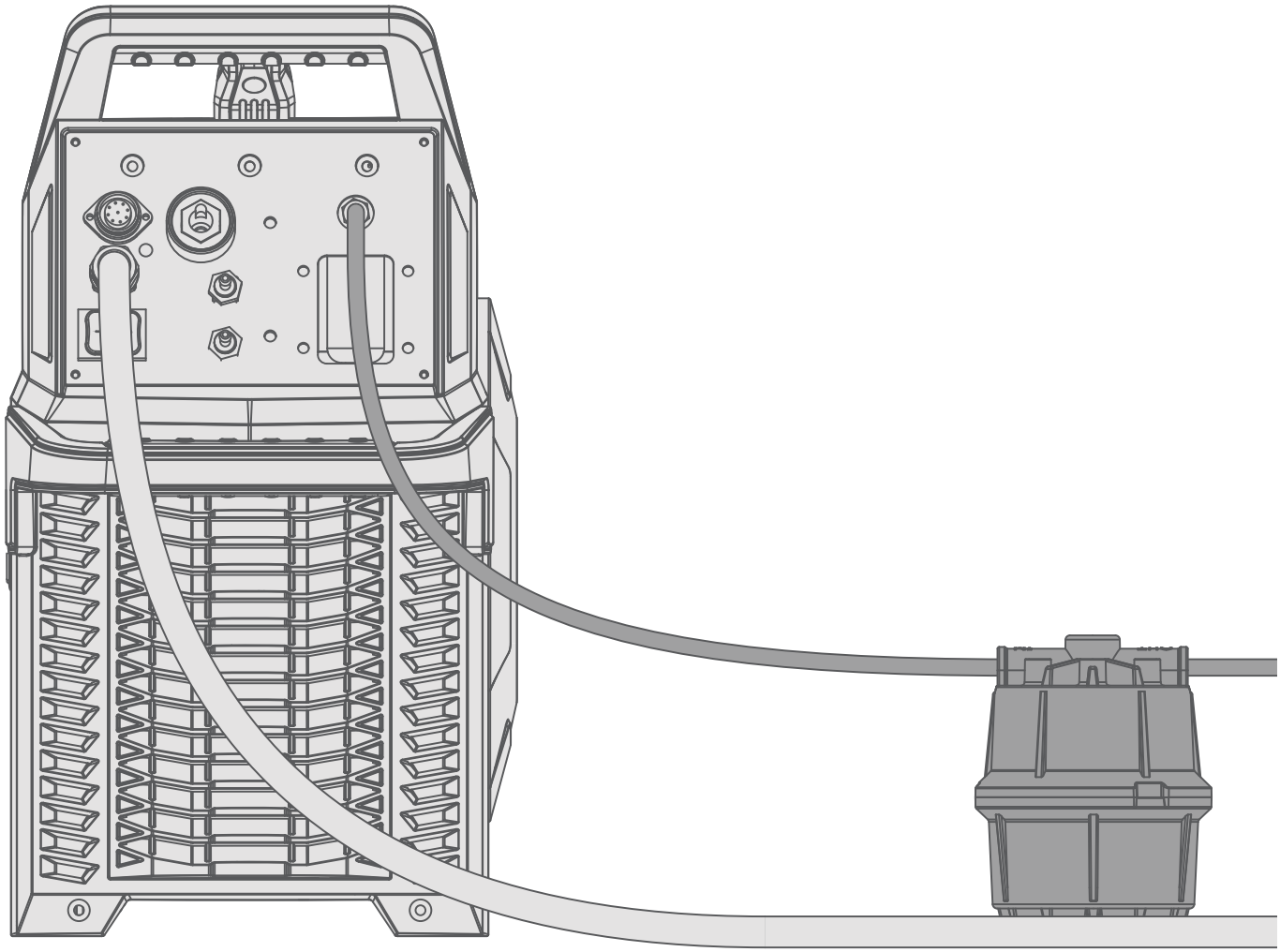

6.23 Adjusting the Air Pressure

1. Open the side panel door and pull the air pressure knob out.
2. Adjust the air pressure. The set pressure is displayed on the Cut Mode screen *(see "7.12 Cut Mode" on page 90)*.
3. Press the air pressure knob back in to lock it in place.

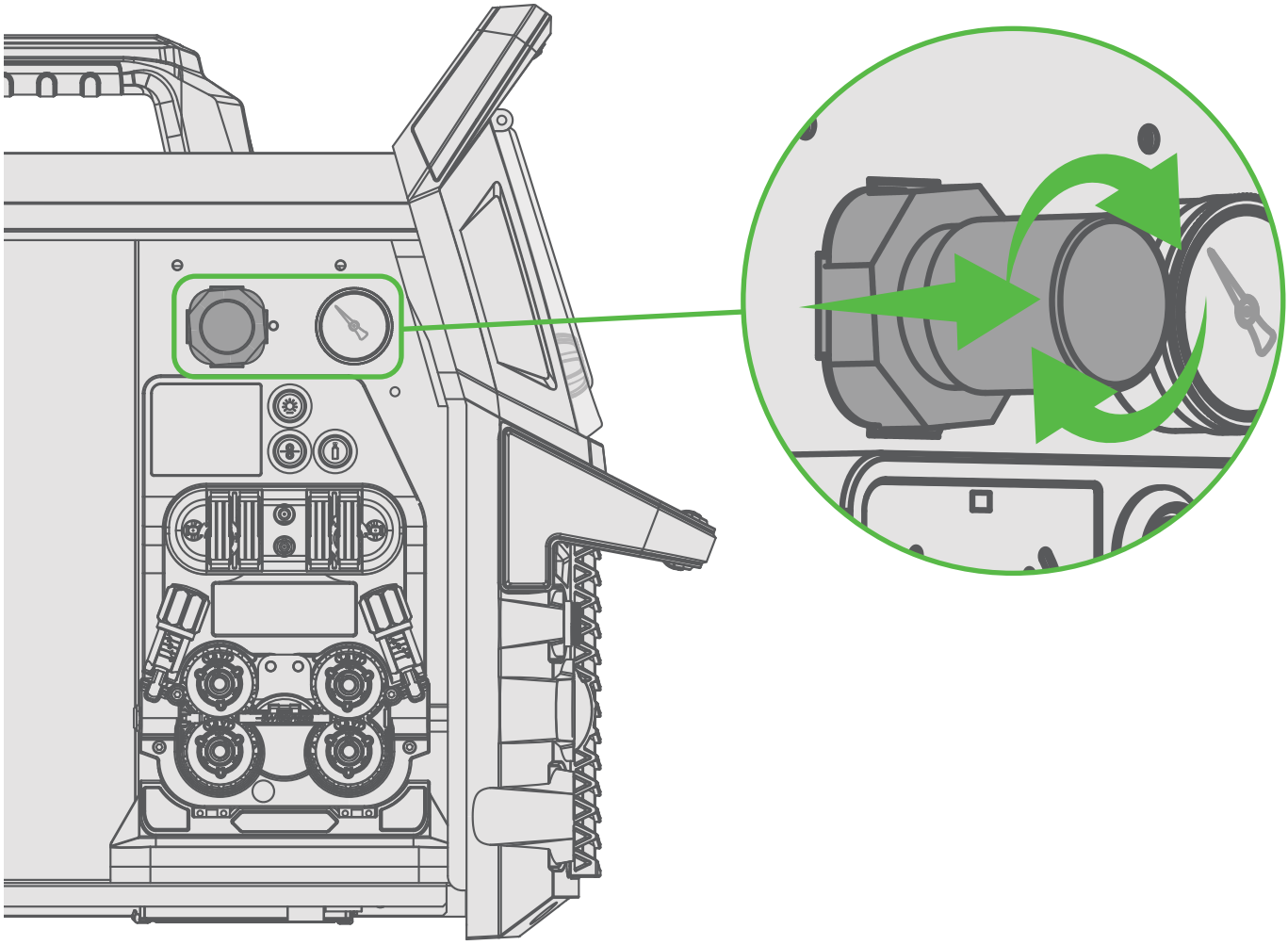

7. Operation

7.1 Preparing for Operation

Before using the equipment, ensure that all the necessary installation actions have been completed according to your equipment setup and instructions.

Industry standards typically dictate the minimum and maximum welding capacity and are influenced by practical considerations for both single-pass and multi-pass welds to secure the best possible quality. The material thicknesses indicated on this machine are subject to these standards and best practices for the weld being performed.

Always check before use that the torch cable, shielding gas hose, earth cable/clamp and power cable are in serviceable condition. Ensure that the connectors are correctly fastened. Loose connectors can impair welding performance and damage connectors.

Connect the plug into the mains socket, then switch the machine ON.

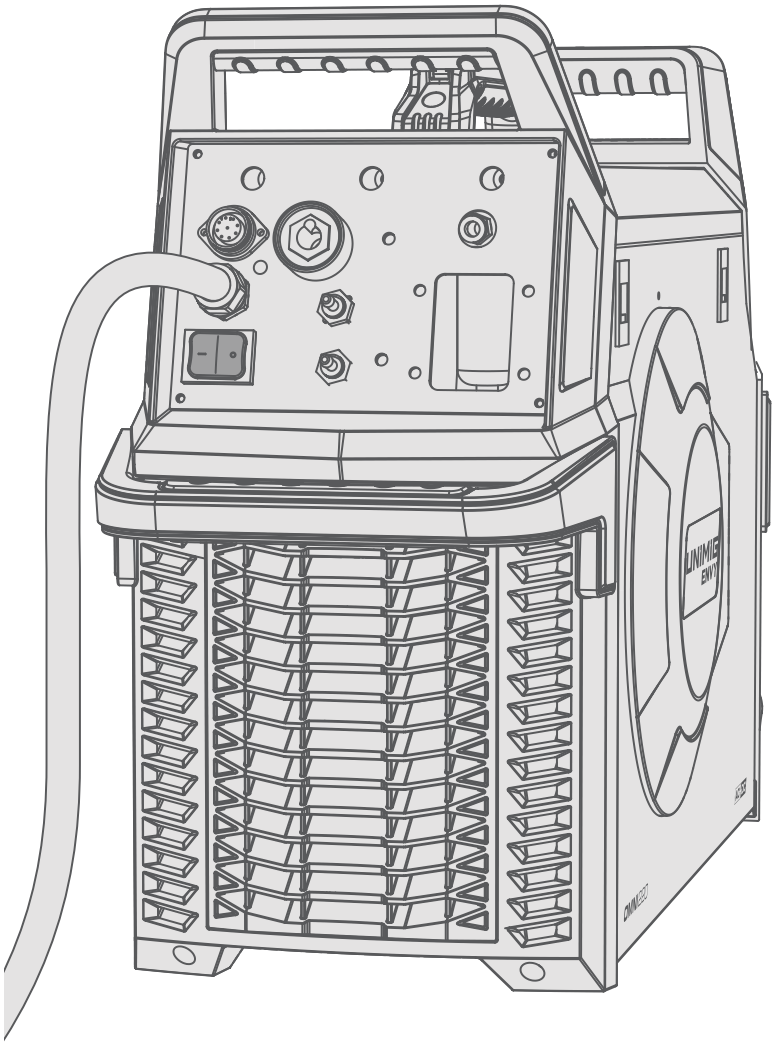

7.2 Control Panel Layout & Operation

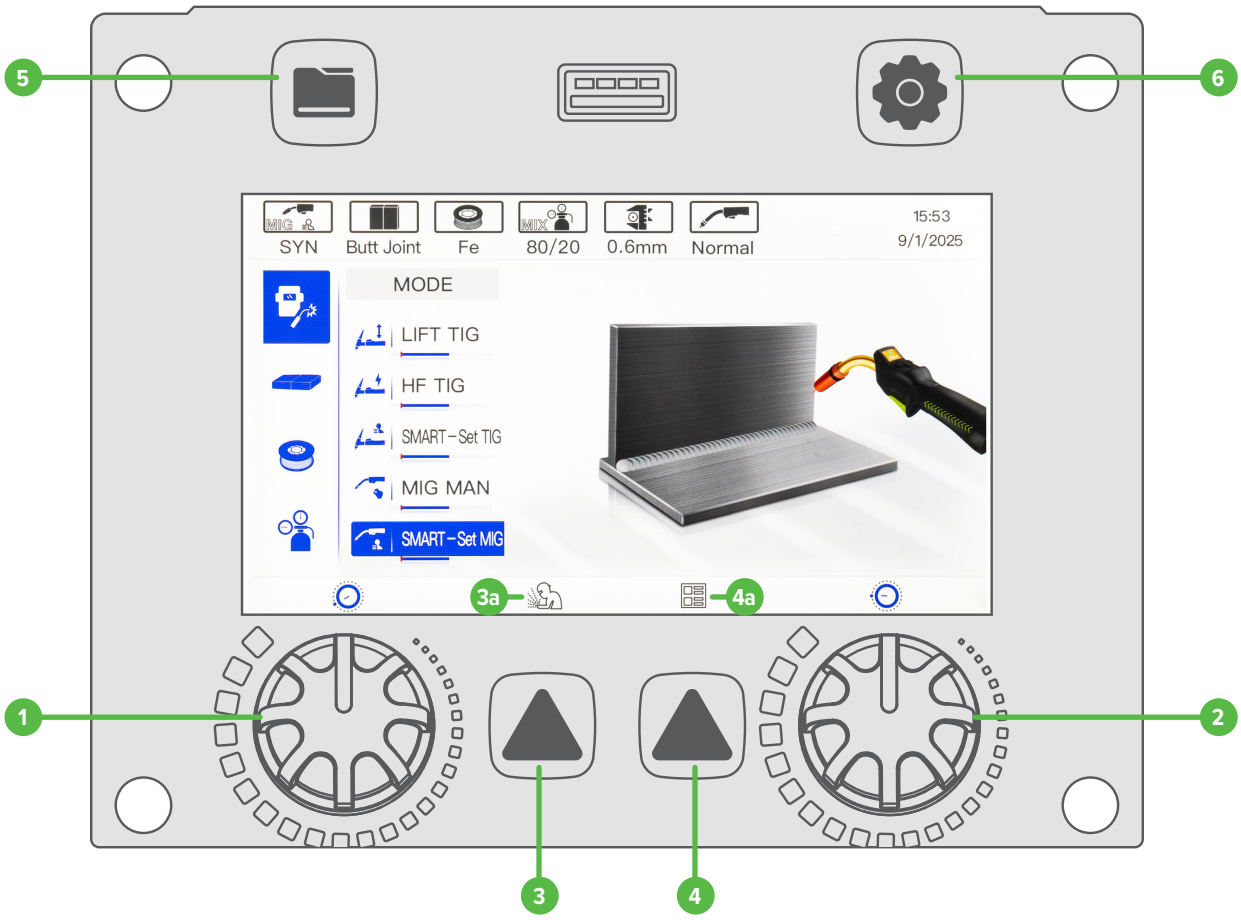

1. **Left control knob**
   a. ↻ **Turn** this knob for digital screen navigation and cycling through menu options. If a menu option is active, turning this knob will adjust the item value.
   b. ☞ **Press** this knob to confirm actions between the weld screen and weld menu parameters. Pressing this knob also cycles through weld cycle parameters.
2. **Right control knob**
   a. ↻ **Turn** this knob for digital screen navigation and cycling through menu options. If a menu option is active, turning this knob will adjust the item value.
   b. ☞ **Press** this knob to confirm actions between the weld screen and weld menu parameters. Pressing this knob also cycles through weld cycle parameters.
3. **Left select button**

   ☞ **Press** the left select button to select the action in **3a**.
4. **Right select button**

   ☞ **Press** the right select button to select the action in **4a**.
5. **Job button**

   ☞ **Press** the Job button to open the Job Menu.
6. **Setting button**

   ☞ **Press** the Settings button to open the Settings Menu.

7.3 MMA Mode

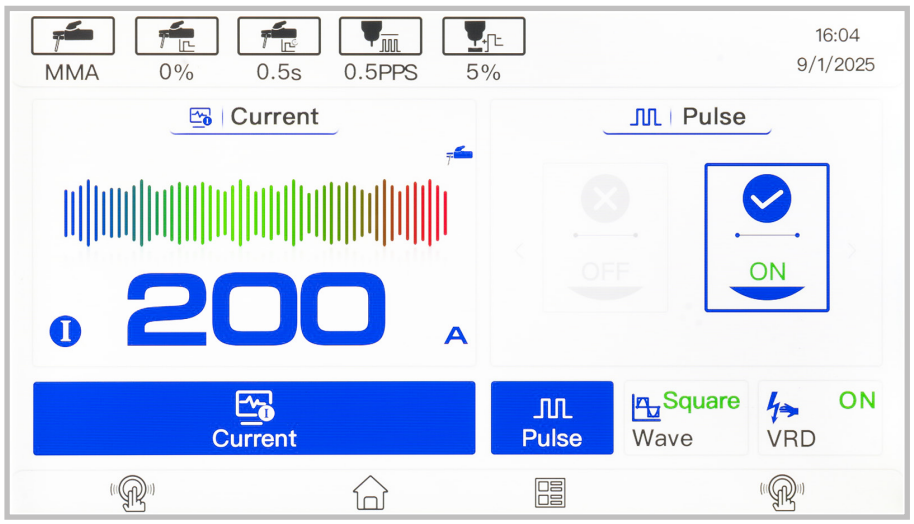

1. From the home screen, **press** the left control knob to select **MMA Mode**.
2. **Turn** the left control knob to adjust the Current.
3. **Press** the right control knob to cycle between Pulse and Wave. **Turn** the right control knob to select a parameter.
4. **Press** the right select button to enter the advanced parameters screen.
5. **Turn** the left control knob to scroll through the parameters. **Turn** the right control knob to adjust the parameters.
6. **Press** the right select button again to return to the main parameters screen.
7. **Press** the left select button to return to the home screen.

7.3.1 Welding Parameters

Parameter	Value	Description
Current	10A - 200A	Sets the maximum current level while welding.
Pulse	Off / On	Alternates the welding current between a high and low value to aid in heat control and improve weld quality.
Wave	DC / AC Square	The waveform determines whether you're welding in DC mode or AC Square mode.
VRD	On	The VRD is a safety device that reduces the open-circuit voltage of a welding machine. This minimises the risk of electric shock, especially in hazardous areas like enclosed or moist environments.

7.3.2 Advanced Welding Parameters

Parameter	Value	Description
Hot Start	0% - 100%	Hot Start boosts the initial welding current for a short duration to ensure a reliable arc start.
Hot Start Time	0.5s - 5s	The time that the Hot Start current runs for.
Peak Amp	10A - 200A	The maximum current level during the weld. This also sets the peak in the pulse cycle.
Base Amp	10A - 200A	The lower current level in the pulse cycle.
Arc Force	0% - 100%	The level of current boost when the machine senses voltage drops, improving arc stability and preventing electrode sticking.
Frequency	0.5PPS - 400PPS	The number of pulse cycles every second.
Pulse Width	5% - 95%	Sets the time the arc stays at its peak amperage during the pulse cycle.

The settings available in the advanced welding parameters screen will depend on the standard welding parameters selected.

7.4 Lift TIG Mode

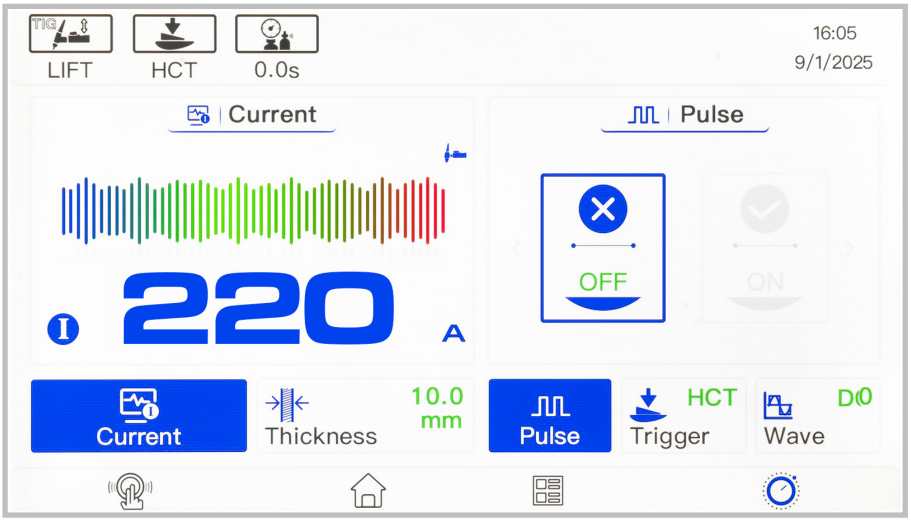

1. From the home screen, **press** the left control knob to select **Lift TIG Mode**.
2. **Press** the left control knob to cycle between Current and Thickness. **Turn** the left control knob to adjust the parameters.
3. **Press** the right control knob to cycle between Pulse, Trigger and Wave. **Turn** the right control knob to select a parameter.
4. **Press** the right select button to enter the advanced parameters screen.
5. **Turn** the left control knob to scroll through the parameters. **Turn** the right control knob to adjust the parameters.
6. **Press** the right select button again to return to the main parameters screen.
7. **Press** the left select button to return to the home screen.

7.4.1 Welding Parameters

Parameter	Value	Description
Current	5A - 220A	Sets the maximum current level while welding.
Thickness	1.0mm - 9mm	Sets the workpiece thickness.
Pulse	Off / On	Alternates the welding current between a high and low value to aid in heat control and improve weld quality.
Trigger	2T / 4T / HCT	Switch between torch trigger modes. **Trigger Mode 2T** Initiates welding when the torch trigger is pressed and stops when released. **Trigger Mode 4T** Press the torch trigger once to start welding and release it. Press again to stop the weld. This mode is useful for longer welds and reducing hand fatigue. **Trigger Mode HCT** Heat Control Trigger (HCT) lets you set a base current which you can switch to at any time during a weld by pressing the trigger button. HCT is great for manual heat input control as you go.
Wave	• DC • AC Square • AC Sine • AC Triangle • AC Square Sine • AC Square Triangle • AC Sine Square • AC Sine Triangle • AC Triangle Square • AC Triangle Sine	The waveform determines whether you're welding in DC mode or AC mode. Select your desired AC waveform.

7.4.2 Advanced Welding Parameters

Parameter	Value	Description
Pre-Gas	0s - 20s	Sets the duration of shielding gas released before the arc ignites.
Start Amp	5A - 220A	Sets the amperage at the beginning of the welding process.
Up Slope	0s - 20s	Sets the time the welding current takes to rise from the Start Amp to the main welding current.
Peak Amp	5A - 220A	The maximum current level during the weld. This also sets the peak in the pulse cycle.
Base Amp	5A - 220A	Sets the lower current level in the pulse cycle.
Pulse Width	5% - 95%	Sets the time the arc stays at its peak amperage during the pulse cycle.
Frequency	0.5PPS - 999PPS	Sets the number of pulse cycles every second.
Down Slope	0s - 20s	Sets the time the welding current takes to decrease from the main welding current to the End Amp.
End Amp	5A - 220A	Sets the final welding current value before the arc stops.
Post-Gas	0s - 20s	Sets the duration of shielding gas released after the welding arc stops.
Steady Arc	0A - 50A	Sets the amount of adjustment on the welding current based on the arc voltage. When the voltage goes down, the amperage will go up, and vice versa, to give a consistent weld puddle, a sharper arc and a constant heat input. **Only available when the straight DC ⎓ waveform is selected.**
Diameter	1.6mm - 3.2mm	Sets the tungsten electrode diameter.
Balance	15% - 50%	Sets the ratio of positive to negative current in the AC cycle.
AC Frequency	50Hz - 250Hz	Sets the number of AC cycles in one second.
Mixed AC/DC	0% - 80%	Sets the percentage of AC in the mixed TIG cycle.
Amplitude Control	Off / On	Separately adjust EP and EN amperages. EN controls penetration, while EP enhances arc cleaning.
Peak EP Amp	5A - 220A	Sets the Electrode Positive (EP) peak amperage.
Peak EN Amp	5A - 220A	Sets the Electrode Negative (EN) peak amperage.
Min Amp	5A - 220A	Sets the minimum amperage of the machine. Only available when in Remote Mode.
Purge	N/A	Purge your gas lines by pressing and holding the right control knob. The gas purge symbol will appear after not adjusting any of the settings, then hold down the right control knob for 3 seconds. This will activate the gas. Continue to hold the knob for as long as you would like to purge the gas.

The settings available in the advanced welding parameters screen will depend on the standard welding parameters selected.

7.5 HF TIG Mode

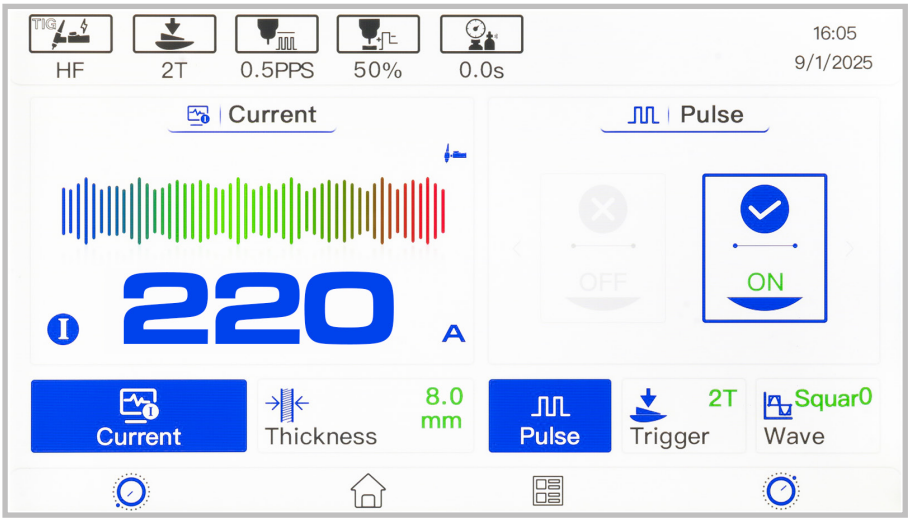

1. From the home screen, ☞ **press** the left control knob to select **HF TIG Mode**.
2. ☞ **Press** the left control knob to cycle between Current and Thickness. 🔄 **Turn** the left control knob to adjust the parameters.
3. ☞ **Press** the right control knob to cycle between Pulse, Trigger and Wave. 🔄 **Turn** the right control knob to select a parameter.
4. ☞ **Press** the right select button to enter the advanced parameters screen.
5. 🔄 **Turn** the left control knob to scroll through the parameters. 🔄 **Turn** the right control knob to adjust the parameters.
6. ☞ **Press** the right select button again to return to the main parameters screen.
7. ☞ **Press** the left select button to return to the home screen.

7.5.1 Welding Parameters

Parameter	Value	Description
Current	5A - 220A	Sets the maximum current level while welding.
Thickness	1.0mm - 9mm	Sets the workpiece thickness.
Pulse	Off / On	Alternates the welding current between a high and low value to aid in heat control and improve weld quality.
Trigger	2T / 4T / HCT / SPOT	Switch between torch trigger modes: **Trigger Mode 2T** Initiates welding when the torch trigger is pressed and stops when released. **Trigger Mode 4T** Press the torch trigger once to start welding and release it. Press again to stop the weld. This mode is useful for longer welds and reducing hand fatigue. **Trigger Mode HCT** Heat Control Trigger (HCT) lets you set a base current which you can switch to at any time during a weld by pressing the trigger button. HCT is great for manual heat input control as you go. **Spot Mode** Spot mode provides precision in creating timed weld spots with controlled intervals and counts. It's ideal for consistent tacking or producing uniform joins across materials.

Parameter	Value	Description
Wave	• DC • AC Square • AC Sine • AC Triangle • AC Square Sine • AC Square Triangle • AC Sine Square • AC Sine Triangle • AC Triangle Square • AC Triangle Sine	The waveform determines whether you're welding in DC mode or AC mode. Select your desired AC waveform.

7.5.2 Advanced Welding Parameters

Parameter	Value	Description
Pre-Gas	0s - 20s	Sets the duration of shielding gas released before the arc ignites.
Start Amp	5A - 220A	Sets the amperage at the beginning of the welding process.
Up Slope	0s - 20s	Sets the time the welding current takes to rise from the Start Amp to the main welding current.
Peak Amp	5A - 220A	The maximum current level during the weld. This also sets the peak in pulse cycle.
Base Amp	5A - 220A	Sets the lower current level in the pulse cycle.
Pulse Width	5% - 95%	Sets the time the arc stays at its peak amperage during the pulse cycle.
Frequency	0.5PPS - 999PPS	Sets the number of pulse cycles every second.
Down Slope	0s - 20s	Sets the time the welding current takes to decrease from the main welding current to the End Amp.
End Amp	5A - 220A	Sets the final welding current value before the arc stops.
Post-Gas	0s - 20s	Sets the duration of shielding gas released after the welding arc stops.
Speed Start	0s - 60s	Speeds up the formation of the weld puddle by applying a synergic pulse program to the beginning of the weld. Sets how long this initial program runs. TackPlus is unavailable while a Speed Start value is set. ⓘ **Only available when the straight DC ⎓ waveform is selected.**
Steady Arc	0A - 50A	Sets the amount of adjustment on the welding current based on the arc voltage. When the voltage goes down, the amperage will go up, and vice versa, to give a consistent weld puddle, a sharper arc and a constant heat input. TackPlus is unavailable while a Steady Arc value is set. ⓘ **Only available when the straight DC ⎓ waveform is selected.**
TackPlus	0Hz - 6Hz	Create evenly spaced and sized fusion tack welds along a joint with minimal heat input. Sets the frequency of the tack welds. Speed Start and Steady Arc are unavailable while a TackPlus value is set. ⓘ **Only available when the straight DC ⎓ waveform is selected.**
Diameter	1.6mm - 3.2mm	Sets the tungsten electrode diameter.
Balance	15% - 50%	Sets the ratio of positive to negative current in the AC cycle.
AC Frequency	50Hz - 250Hz	Sets the number of AC cycles in one second.
Mixed AC/DC	0% - 80%	Sets the percentage of AC in the mixed TIG cycle.
Amplitude Control	Off / On	Separately adjust EP and EN amperages. EN controls penetration, while EP enhances arc cleaning.
Peak EP Amp	5A - 220A	Sets the Electrode Positive (EP) peak amperage.
Peak EN Amp	5A - 220A	Sets the Electrode Negative (EN) peak amperage.

Parameter	Value	Description
Cap Shaping	Off / On	Automatically balls the tungsten end, eliminating manual preparation for enhanced efficiency.
Spot Time	0.1s - 20s	Sets the duration for each spot weld.
Min Amp	5A - 220A	Sets the minimum amperage of the machine. Only available when in Remote Mode.
Purge	N/A	Purge your gas lines by pressing and holding the right control knob. The gas purge symbol  will appear after not adjusting any of the settings, then hold down the right control knob for 3 seconds. This will activate the gas. Continue to hold the knob for as long as you would like to purge the gas.

The settings available in the advanced welding parameters screen will depend on the standard welding parameters selected.

7.6 Smart-Set TIG Mode

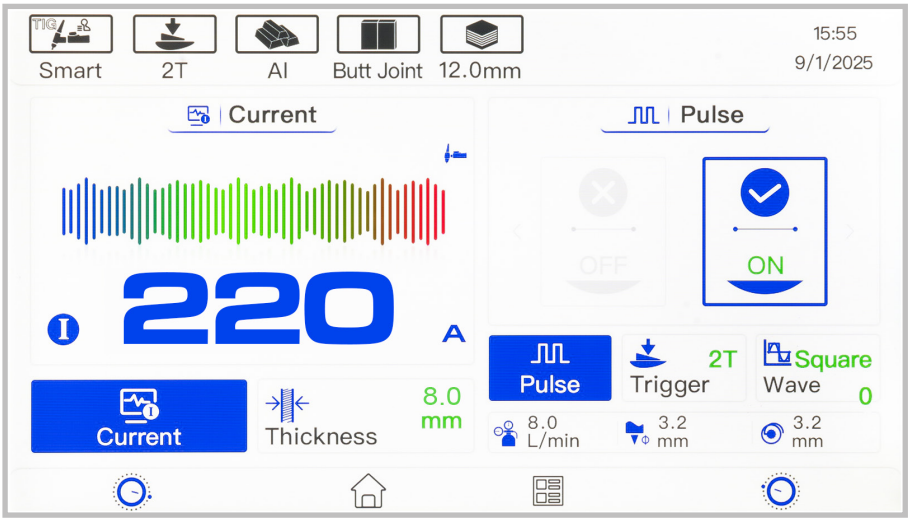

1. From the home screen, ☞ **press** the left control knob to select **Smart-Set TIG Mode**.
2. ↻ **Turn** the left control knob to choose a material type and ☞ **press** to select it.
3. ↻ **Turn** the left control knob to choose a joint type and ☞ **press** to select it.
4. ↻ **Turn** the left control knob to choose a tungsten diameter and ☞ **press** to select it.
5. ↻ **Turn** the left control knob to choose a material thickness and ☞ **press** to select it.
6. ☞ **Press** the left control knob to choose a gas.
7. ☞ **Press** the right select button at any of these steps to return back to the previous screen.
8. ☞ **Press** the left control knob to cycle between Current and Thickness. ↻ **Turn** the left control knob to adjust the parameters.
9. ☞ **Press** the right control knob to cycle between Pulse, Trigger and Wave. ↻ **Turn** the right control knob to select a parameter.
10. ☞ **Press** the right select button to enter the advanced parameters screen.
11. ↻ **Turn** the left control knob to scroll through the parameters. ↻ **Turn** the right control knob to adjust the parameters.
12. ☞ **Press** the right select button again to return to the main parameters screen.
13. ☞ **Press** the left select button to return to the home screen.

7.6.1 Welding Parameters

Parameter	Value	Description
Current	5A - 220A	Sets the maximum current level while welding.
Thickness	1.0mm - 12mm	Sets the workpiece thickness.
Pulse	Off / On	Alternates the welding current between a high and low value to aid in heat control and improve weld quality.
Trigger	2T / 4T / HCT / SPOT	Switch between torch trigger modes: **Trigger Mode 2T** Initiates welding when the torch trigger is pressed and stops when released. **Trigger Mode 4T** Press the torch trigger once to start welding and release it. Press again to stop the weld. This mode is useful for longer welds and reducing hand fatigue. **Trigger Mode HCT** Heat Control Trigger (HCT) lets you set a base current which you can switch to at any time during a weld by pressing the trigger button. HCT is great for manual heat input control as you go. **Spot Mode** Spot mode provides precision in creating timed weld spots with controlled intervals and counts. It's ideal for consistent tacking or producing uniform joins across materials.

Parameter	Value	Description
Wave	• DC • AC Square • AC Sine • AC Triangle • AC Square Sine • AC Square Triangle • AC Sine Square • AC Sine Triangle • AC Triangle Square • AC Triangle Sine	The waveform determines whether you're welding in DC mode or AC mode. Select your desired AC waveform.

7.6.2 Advanced Welding Parameters

Parameter	Value	Description
Pre-Gas	0s - 20s	Sets the duration of shielding gas released before the arc ignites.
Start Amp	5A - 220A	Sets the amperage at the beginning of the welding process.
Up Slope	0s - 20s	Sets the time the welding current takes to rise from the Start Amp to the main welding current.
Peak Amp	5A - 220A	The maximum current level during the weld. This also sets the peak in the pulse cycle.
Base Amp	5A - 220A	Sets the lower current level in the pulse cycle.
Pulse Width	5% - 95%	Sets the time the arc stays at its peak amperage during the pulse cycle.
Frequency	0.5PPS - 999PPS	Sets the number of pulse cycles every second.
Down Slope	0s - 20s	Sets the time the welding current takes to decrease from the main welding current to the End Amp.
End Amp	5A - 220A	Sets the final welding current value before the arc stops.
Post-Gas	0s - 20s	Sets the duration of shielding gas released after the welding arc stops.
Speed Start	0s - 60s	Speeds up the formation of the weld puddle by applying a synergic pulse program to the beginning of the weld. Sets how long this initial program runs. TackPlus is unavailable while a Speed Start value is set. ⓘ **Only available when the straight DC ⎓ waveform is selected.**
Steady Arc	0A - 50A	Sets the amount of adjustment on the welding current based on the arc voltage. When the voltage goes down, the amperage will go up, and vice versa, to give a consistent weld puddle, a sharper arc and a constant heat input. TackPlus is unavailable while a Steady Arc value is set. ⓘ **Only available when the straight DC ⎓ waveform is selected.**
TackPlus	0Hz - 6Hz	Create evenly spaced and sized fusion tack welds along a joint with minimal heat input. Sets the frequency of the tack welds. Speed Start and Steady Arc are unavailable while a TackPlus value is set. ⓘ **Only available when the straight DC ⎓ waveform is selected.**
Diameter	1.6mm - 3.2mm	Sets the tungsten electrode diameter.
Balance	15% - 50%	Sets the ratio of positive to negative current in the AC cycle.
AC Frequency	50Hz - 250Hz	Sets the number of AC cycles in one second.
Mixed AC/DC	0% - 80%	Sets the percentage of AC in the mixed TIG cycle.
Amplitude Control	Off / On	Separately adjust EP and EN amperages. EN controls penetration, while EP enhances arc cleaning.
Peak EP Amp	5A - 220A	Sets the Electrode Positive (EP) peak amperage.
Peak EN Amp	5A - 220A	Sets the Electrode Negative (EN) peak amperage.

Parameter	Value	Description
Cap Shaping	Off / On	Automatically balls the tungsten end, eliminating manual preparation for enhanced efficiency.
Spot Time	0.1s - 10s	Sets the duration for each spot weld.
Min Amp	5A - 220A	Sets the minimum amperage of the machine. Only available when in Remote Mode.
Purge	N/A	Purge your gas lines by pressing and holding the right control knob. The gas purge symbol  will appear after not adjusting any of the settings, then hold down the right control knob for 3 seconds. This will activate the gas. Continue to hold the knob for as long as you would like to purge the gas.

The settings available in the advanced welding parameters screen will depend on the standard welding parameters selected.

7.7 Advanced TIG Weld Cycles

DC Weld Cycle

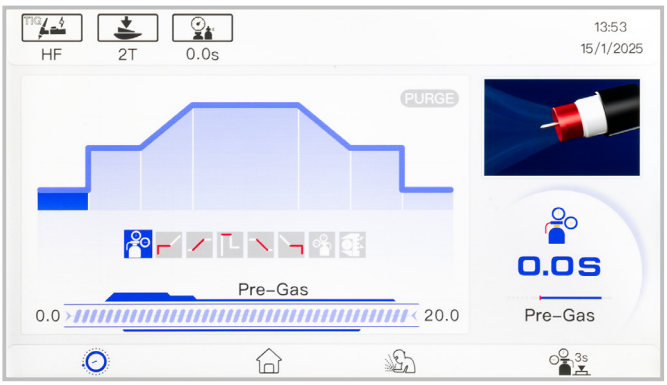

DC Pulse Weld Cycle

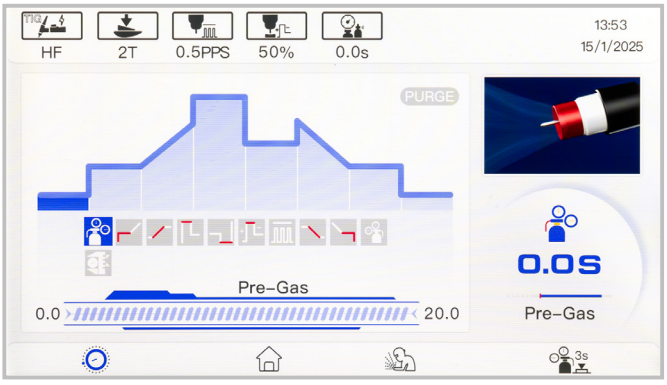

AC Weld Cycle



AC Pulse Weld Cycle

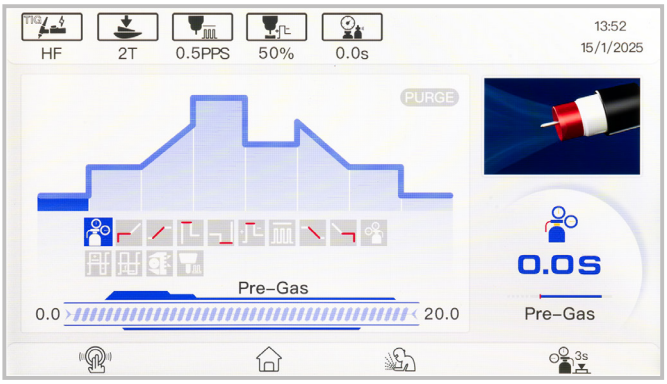

7.8 Manual MIG Mode

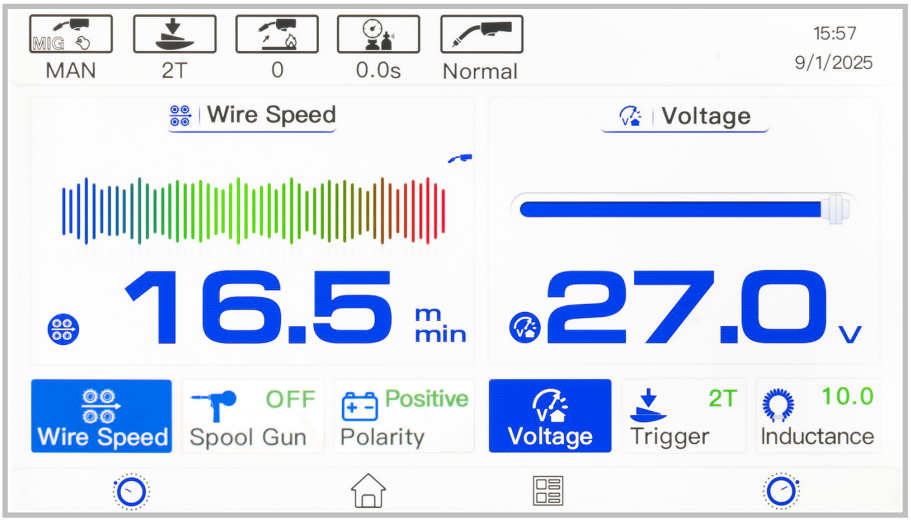

1. From the home screen, ☞ **press** the left control knob to select **MIG Manual Mode**.
2. ☞ **Press** the left control knob to cycle between Wire Speed, Spool Gun and Polarity. 🔄 **Turn** the left control knob to adjust the parameters.
3. ☞ **Press** the right control knob to cycle between Voltage, Trigger and Inductance. 🔄 **Turn** the right control knob to select a parameter.
4. ☞ **Press** the right select button to enter the advanced parameters screen.
5. 🔄 **Turn** the left control knob to scroll through the parameters. 🔄 **Turn** the right control knob to adjust the parameters.
6. ☞ **Press** the right select button again to return to the main parameters screen.
7. ☞ **Press** the left select button to return to the home screen.

7.8.1 Welding Parameters

Parameter	Value	Description
Wire Speed	1.5m/min - 16.5m/min	Sets the wire feed speed while welding.
Spool Gun	Off / On	Select if a spool gun is being used.
Polarity	DCEP / DCEN	Sets the torch polarity.
Voltage	10V - 27V	Sets the voltage while welding.
Trigger	2T / 4T / SPOT	**Trigger Mode 2T** Initiates welding when the torch trigger is pressed and stops when released. **Trigger Mode 4T** Press the torch trigger once to start welding and release it. Press again to stop the weld. This mode is useful for longer welds and reducing hand fatigue. **Spot Mode** Spot mode provides precision in creating timed weld spots with controlled intervals and counts. It's ideal for consistent tacking or producing uniform joins across materials.
Inductance	-10 - 10	Sets the inductance level, which controls the arc's smoothness and spatter.

7.8.2 Advanced Welding Parameters

Parameter	Value	Description
Pre-Gas	0s - 20s	Sets the duration of shielding gas released before the arc ignites.
Peak Voltage	10.0V - 27.0V	Sets the voltage while welding.
Burn Back	0 - 10	Sets how long the wire will stay charged after feeding stops, ensuring the wire end is clean for the next start, reducing the risk of wire sticking to the workpiece.
Post-Gas	0s - 20s	Sets the duration of shielding gas released after the welding arc stops.
Spot Time	0.5s - 20s	Sets the duration for each spot weld.
Spot Pause Time	0.5s - 20s	Sets the time between each spot weld.
Purge	N/A	Purge your gas lines by pressing and holding the right control knob. The gas purge symbol will appear after not adjusting any of the settings, then hold down the right control knob for 3 seconds. This will activate the gas. Continue to hold the knob for as long as you would like to purge the gas.

The settings available in the advanced welding parameters screen will depend on the standard welding parameters selected.

7.9 Smart-Set MIG Mode

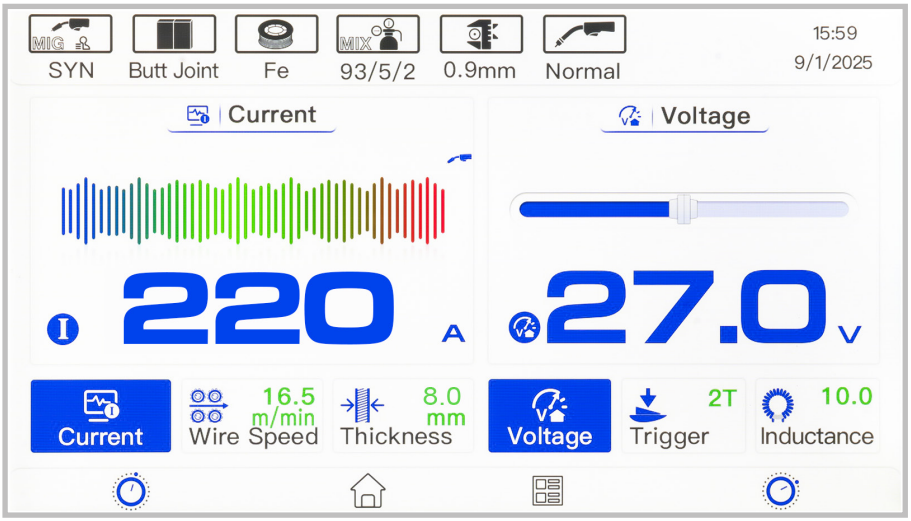

1. From the home screen, ☞ **press** the left control knob to select **Smart-Set MIG Mode**.
2. ↻ **Turn** the left control knob to choose a joint type and ☞ **press** to select it.
3. ↻ **Turn** the left control knob to choose a material type and ☞ **press** to select it.
4. ↻ **Turn** the left control knob to choose a gas type and ☞ **press** to select it.
5. ↻ **Turn** the left control knob to choose a wire size and ☞ **press** to select it.
6. A popup will appear displaying the necessary polarity for the selected parameters
7. ☞ **Press** the right select button at any of these steps to return back to the previous screen.
8. ☞ **Press** the left control knob to cycle between Current, Wire Speed and Thickness. ↻ **Turn** the left control knob to adjust the parameters.
9. ☞ **Press** the right control knob to cycle between Voltage, Trigger and Inductance. ↻ **Turn** the right control knob to select a parameter.
10. ☞ **Press** the right select button to enter the advanced parameters screen.
11. ↻ **Turn** the left control knob to scroll through the parameters. ↻ **Turn** the right control knob to adjust the parameters.
12. ☞ **Press** the right select button again to return to the main parameters screen.
13. ☞ **Press** the left select button to return to the home screen.

7.9.1 Welding Parameters

Parameter	Value	Description
Current	25A - 220A	Sets the maximum current level while welding.
Wire Speed	1.5m/min - 16.5m/min	Sets the wire feed speed while welding.
Thickness	0.8mm - 10mm	Sets the workpiece thickness.
Voltage Offset	-9.9 - 9.9	Sets the voltage adjustment.
Trigger	2T / 4T / SPOT	**Trigger Mode 2T** Initiates welding when the torch trigger is pressed and stops when released. **Trigger Mode 4T** Press the torch trigger once to start welding and release it. Press again to stop the weld. This mode is useful for longer welds and reducing hand fatigue. **Spot Mode** Spot mode provides precision in creating timed weld spots with controlled intervals and counts. It's ideal for consistent tacking or producing uniform joins across materials.
Inductance	-10 - 10	Sets the inductance level, which controls the arc's smoothness and spatter.

7.9.2 Advanced Welding Parameters

Pre-Gas	0s - 20s	Sets the duration of shielding gas released before the arc ignites.
Hot Start	100% - 200%	Hot Start boosts the initial welding current for a short duration to ensure a reliable arc start. Sets the amount of initial boost in the welding current.
Hot Start Time	0s - 20s	Sets the time that the Hot Start current runs for.
Hot Start Slope	0s - 20s	Sets the time the welding current takes to change from the Hot Start current to the main welding current.
Peak Amp	25A - 220A	The maximum current level while welding.
End Current Slope	0s - 20s	Sets the time it takes to transition from the main welding current to the set Crater Fill current.
Crater Fill	10% - 100%	Sets the level of current applied during the crater fill phase as a percentage of the welding machine's main welding current.
Crater Fill Time	0s - 20s	Sets the time that the Crater Fill runs for.
Burn Back	0 - 10	Sets how long the wire will stay charged after feeding stops, ensuring the wire end is clean for the next start, reducing the risk of wire sticking to the workpiece.
Post-Gas	0s - 20s	Sets the duration of shielding gas released after the welding arc stops.
Spot Time	0.5s - 20s	Sets the duration for each spot weld.
Spot Pause Time	0.5s - 20s	Sets the time between each spot weld.
Purge	N/A	Purge your gas lines by pressing and holding the right control knob. The gas purge symbol will appear after not adjusting any of the settings, then hold down the right control knob for 3 seconds. This will activate the gas. Continue to hold the knob for as long as you would like to purge the gas.

The settings available in the advanced welding parameters screen will depend on the standard welding parameters selected.

7.10 Pulse MIG Mode

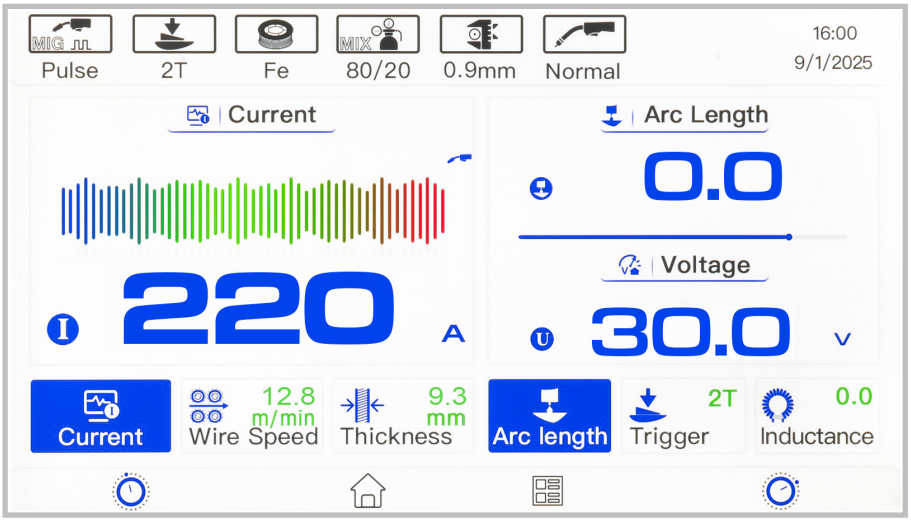

1. From the home screen, **press** the left control knob to select **Pulse MIG Mode**.
2. **Turn** the left control knob to choose a material type and **press** to select it.
3. **Turn** the left control knob to choose a gas type and **press** to select it.
4. **Turn** the left control knob to choose a wire size and **press** to select it.
5. A popup will appear displaying the necessary polarity for the selected parameters.
6. **Press** the right select button at any of these steps to return back to the previous screen.
7. **Press** the left control knob to cycle between Current and Thickness. **Turn** the left control knob to adjust the parameters.
8. **Press** the right control knob to cycle between Arc Length, Trigger and Inductance. **Turn** the right control knob to select a parameter.
9. **Press** the right select button to enter the advanced parameters screen.
10. **Turn** the left control knob to scroll through the parameters. **Turn** the right control knob to adjust the parameters.
11. **Press** the right select button again to return to the main parameters screen.
12. **Press** the left select button to return to the home screen.

7.10.1 Welding Parameters

Parameter	Value	Description
Current	25A - 220A	Sets the maximum current level while welding.
Wire Speed	1.5m/min - 16.5m/min	Sets the wire feed speed while welding.
Thickness	0.8mm - 10mm	Sets the workpiece thickness.
Arc Length	-20 - 20	Sets the voltage adjustment.
Trigger	2T / 4T / SPOT	**Trigger Mode 2T** Initiates welding when the torch trigger is pressed and stops when released. **Trigger Mode 4T** Press the torch trigger once to start welding and release it. Press again to stop the weld. This mode is useful for longer welds and reducing hand fatigue. **Spot Mode** Spot mode provides precision in creating timed weld spots with controlled intervals and counts. It's ideal for consistent tacking or producing uniform joins across materials.
Inductance	-10 - 10	Sets the inductance level, which controls the arc's smoothness and spatter.

7.10.2 Advanced Welding Parameters

Parameter	Value	Description
Pre-Gas	0s - 20s	Sets the duration of shielding gas released before the arc ignites.
Hot Start	100% - 200%	Hot Start boosts the initial welding current for a short duration to ensure a reliable arc start. Sets the amount of initial boost in the welding current.
Hot Start Time	0s - 20s	Sets the time that the Hot Start current runs for.
Hot Start Slope	0s - 20s	Sets the time the welding current takes to change from the Hot Start current to the main welding current.
Peak Amp	25A - 220A	The maximum current level while welding.
End Current Slope	0s - 20s	Sets the time it takes to transition from the main welding current to the set Crater Fill current.
Crater Fill	10% - 100%	Sets the level of current applied during the crater fill phase as a percentage of the welding machine's main welding current.
Crater Fill Time	0s - 20s	Sets the time that the Crater Fill runs for.
Burn Back	0 - 10	Sets how long the wire will stay charged after feeding stops, ensuring the wire end is clean for the next start, reducing the risk of wire sticking to the workpiece.
Post-Gas	0s - 20s	Sets the duration of shielding gas released after the welding arc stops.
Spot Time	0.5s - 20s	Sets the duration for each spot weld.
Spot Pause Time	0.5s - 20s	Sets the time between each spot weld.
Purge	N/A	Purge your gas lines by pressing and holding the right control knob. The gas purge symbol will appear after not adjusting any of the settings, then hold down the right control knob for 3 seconds. This will activate the gas. Continue to hold the knob for as long as you would like to purge the gas.

The settings available in the advanced welding parameters screen will depend on the standard welding parameters selected.

7.11 DP (Double Pulse) MIG Mode

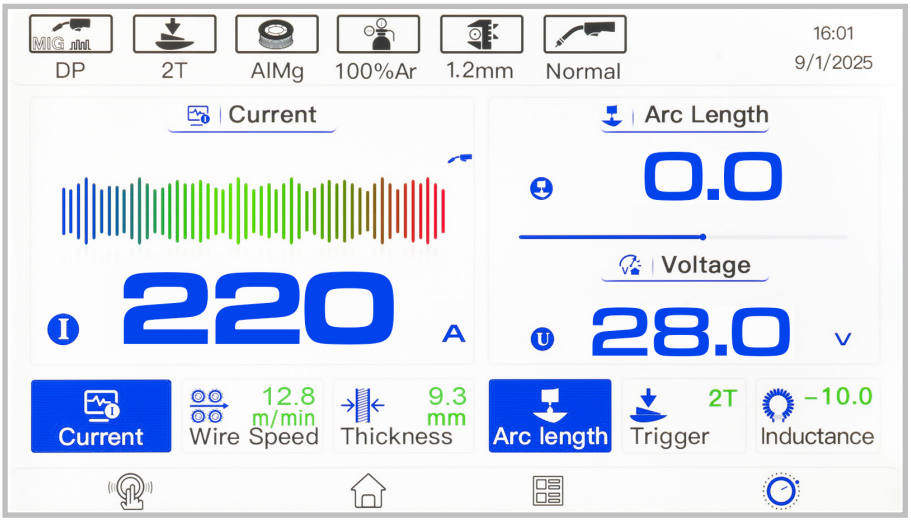

1. From the home screen, ☞ **press** the left control knob to select **DP MIG Mode**.
2. 🔄 **Turn** the left control knob to choose a material type and ☞ **press** to select it.
3. 🔄 **Turn** the left control knob to choose a gas type and ☞ **press** to select it.
4. 🔄 **Turn** the left control knob to choose a wire size and ☞ **press** to select it.
5. A popup will appear displaying the necessary polarity for the selected parameters.
6. ☞ **Press** the right select button at any of these steps to return back to the previous screen.
7. ☞ **Press** the left control knob to cycle between Current and Thickness. 🔄 **Turn** the left control knob to adjust the parameters.
8. ☞ **Press** the right control knob to cycle between Arc Length, Trigger and Inductance. 🔄 **Turn** the right control knob to select a parameter.
9. ☞ **Press** the right select button to enter the advanced parameters screen.
10. 🔄 **Turn** the left control knob to scroll through the parameters. 🔄 **Turn** the right control knob to adjust the parameters.
11. ☞ **Press** the right select button again to return to the main parameters screen.
12. ☞ **Press** the left select button to return to the home screen.

7.11.1 Welding Parameters

Parameter	Value	Description
Current	25A - 220A	Sets the maximum current level while welding.
Wire Speed	1.5m/min - 16.5m/min	Sets the wire feed speed while welding.
Thickness	0.8mm - 10mm	Sets the workpiece thickness.
Arc Length	-20 - 20	Sets the voltage adjustment.
Trigger	2T / 4T / SPOT	**Trigger Mode 2T** Initiates welding when the torch trigger is pressed and stops when released. **Trigger Mode 4T** Press the torch trigger once to start welding and release it. Press again to stop the weld. This mode is useful for longer welds and reducing hand fatigue. **Spot Mode** Spot mode provides precision in creating timed weld spots with controlled intervals and counts. It's ideal for consistent tacking or producing uniform joins across materials.
Inductance	-10 - 10	Sets the inductance level, which controls the arc's smoothness and spatter.

7.11.2 Advanced Welding Parameters

Parameter	Value	Description
Pre-Gas	0s - 20s	Sets the duration of shielding gas released before the arc ignites.
Hot Start	100% - 200%	Hot Start boosts the initial welding current for a short duration to ensure a reliable arc start. Sets the amount of initial boost in the welding current.
Hot Start Time	0s - 20s	Sets the time that the Hot Start current runs for.
Hot Start Slope	0s - 20s	Sets the time the welding current takes to change from the Hot Start current to the main welding current.
Peak Amp	25A - 220A	The maximum current level during the weld. This also sets the peak in pulse cycle.
Peak Time	0.01s - 20s	Sets the time spent in the first pulse.
Base Amp P	1% - 200%	Sets the Base Amp (second pulse) as a percentage of the Peak Amp.
Base Time	0.01s - 20s	Sets the time spent in the second pulse.
Base Arc Length	-20 - 20	Sets the voltage adjustment of the second pulse.
End Current Slope	0s - 20s	Sets the time it takes to transition from the main welding current to the set Crater Fill current.
Crater Fill	10% - 100%	Sets the level of current applied during the crater fill phase as a percentage of the welding machine's main welding current.
Crater Fill Time	0s - 20s	Sets the time that the Crater Fill runs for.
Burn Back	0 - 10	Sets how long the wire will stay charged after feeding stops, ensuring the wire end is clean for the next start, reducing the risk of wire sticking to the workpiece.
Post-Gas	0s - 20s	Sets the duration of shielding gas released after the welding arc stops.
Spot Time	0.5s - 20s	Sets the duration for each spot weld.
Spot Pause Time	0.5s - 20s	Sets the time between each spot weld.
Purge	N/A	Purge your gas lines by pressing and holding the right control knob. The gas purge symbol will appear after not adjusting any of the settings, then hold down the right control knob for 3 seconds. This will activate the gas. Continue to hold the knob for as long as you would like to purge the gas.

The settings available in the advanced welding parameters screen will depend on the standard welding parameters selected.

7.12 Cut Mode

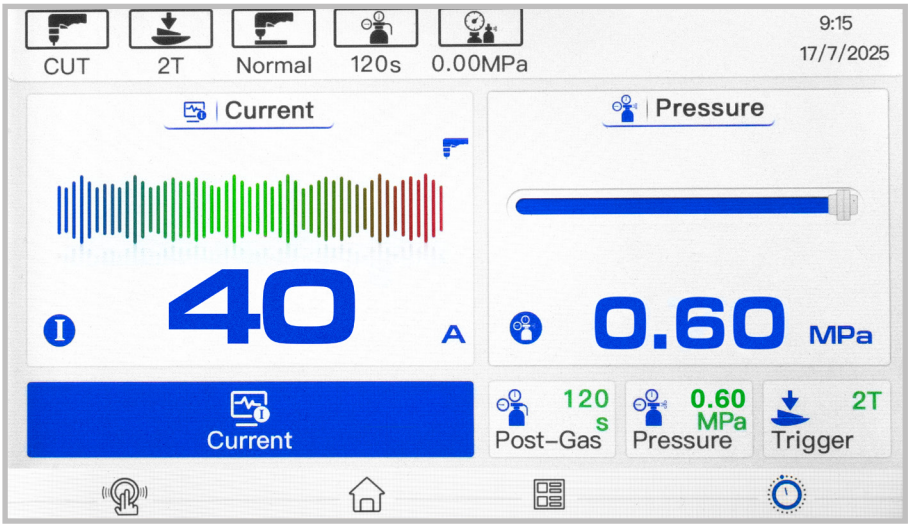

1. From the home screen, **press** the left control knob to select **Cut Mode**.
2. **Turn** the left control knob to choose a cut mode and **press** to select it.
3. **Turn** the left control knob to adjust the Current.
4. **Press** the right control knob to cycle between Post-Gas, Pressure and Trigger. **Turn** the right control knob to adjust the parameter.
5. **Press** the left select button to return to the home screen.

7.12.1 Cutting Parameters

Parameter	Value	Description
Current	20A - 40A	Sets the maximum current level while plasma cutting.
Post-Gas	5s - 120s	Sets the duration of air released after the plasma arc stops.
Pressure	0.00 - 1.00MPa	Displays the air flow pressure while plasma cutting.
Trigger	2T / 4T	Switch between torch trigger modes: **Torch Mode 2T** Initiates cutting when the torch trigger is pressed and stops when released. **Torch Mode 4T** Press the torch trigger once to start cutting and release it. Press again to stop the cut. This mode is useful for longer cuts and reducing hand fatigue.

7.13 Smart-Set Cut Mode

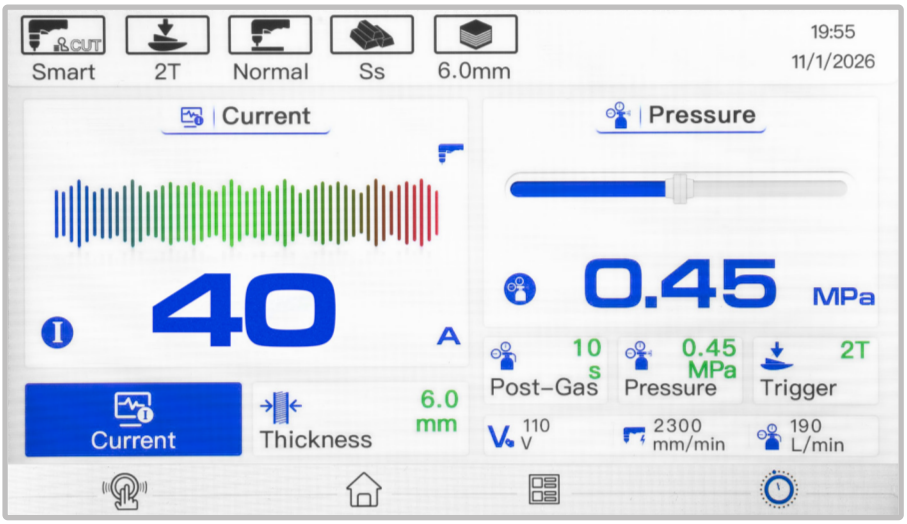

1. From the home screen, ☞ **press** the left control knob to select **Smart-Set Cut Mode**.
2. 🔄 **Turn** the left control knob to choose a cut mode and ☞ **press** to select it.
3. 🔄 **Turn** the left control knob to choose a material and ☞ **press** to select it.
4. 🔄 **Turn** the left control knob to choose a material thickness and ☞ **press** to select it.
5. ☞ **Press** the left control knob to cycle between Current and Thickness. 🔄 **Turn** the left control knob to adjust the parameter.
6. ☞ **Press** the right control knob to cycle between Post-Gas, Pressure and Trigger. 🔄 **Turn** the right control knob to adjust the parameter
7. ☞ **Press** the left select button to return to the home screen.

7.13.1 Cutting Parameters

Parameter	Value	Description
Current	20A - 40A	Sets the maximum current level while plasma cutting.
Thickness	1mm - 25mm	Sets the workpiece thickness.
Post-Gas	5s - 120s	Sets the duration of air released after the plasma arc stops.
Pressure	0.20MPa - 0.70MPa	Sets the air flow pressure while plasma cutting.
Trigger	2T / 4T	Switch between torch trigger modes. **Trigger Mode 2T** Initiates cutting when the torch trigger is pressed and stops when released. **Trigger Mode 4T** Press the torch trigger once to start cutting and release it. Press again to stop the cut. This mode is useful for longer cuts and reducing hand fatigue.

ⓘ **The settings available will depend on the parameters selected.**

7.14 Job Menu

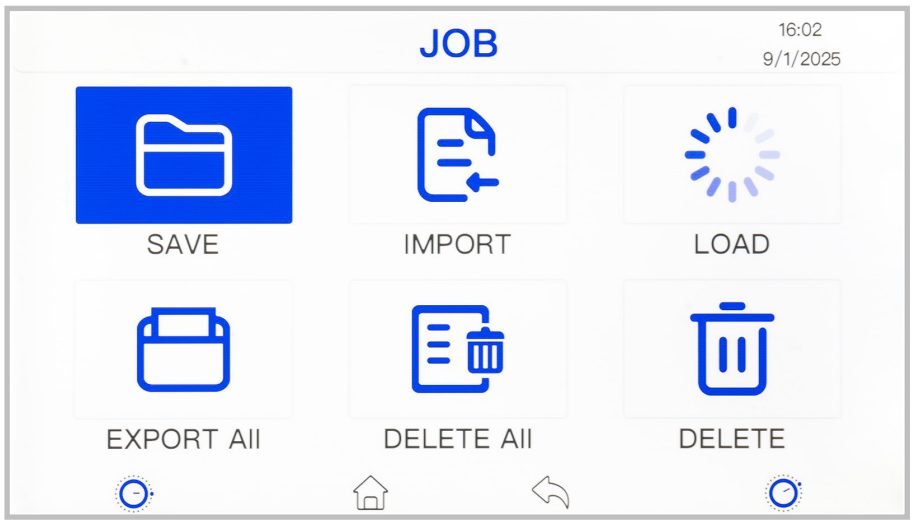

1. ☞ **Press** the Job button to open the Job Menu screen.
2. ⟳ **Turn** the left or right control knob to choose an option. ☞ **Press** to select it.

7.14.1 Saving a Job

1. On the weld screen and parameters you want to save, ☞ **press** the Job button. ☞ **Press** either control knob to select Save.
2. ☞ **Press** either control knob to select New Job.
3. Choose a name for the job. ⟳ **Turn** the right control knob to navigate the keyboard and ☞ **press** it to select each letter. ☞ **Press** Enter to save.

7.14.2 Overwriting a Job

1. In the Save Job screen, ⟳ **turn** either control knob to hover over and ☞ **press** to select the job you want to overwrite.
2. ⟳ **Turn** the right control knob and ☞ **press** to select Overwrite. This will erase the previous job stored under that name.

7.14.3 Importing a Job

If you don't have a USB plugged into the machine, you will get a warning message in the top left corner 'No USB storage device detected, please connect the USB storage device and try again'.

1. ☞ **Press** either control knob to select Import to bring up the USB files.
2. ☞ **Press** and ⟳ **turn** either control knob to select the job(s) you want to import.

7.14.4 Exporting a Job

If you don't have a USB plugged into the machine, you will get a warning message in the top left corner 'No USB storage device detected, please connect the USB storage device and try again'.

1. ☞ **Press** either control knob to select Export.
2. A popup 'Export complete' will appear if the export was successful.

7.14.5 Deleting a Job

There are two options to delete a job: Delete All or Delete.

To delete every saved job on the machine:

1. **Turn** and **press** either control knob to select Delete All. A confirmation message will appear.
2. **Turn** and **press** the right control knob to select Delete to confirm.

To delete a single job on the machine:

1. **Turn** and **press** either control knob to select Delete.
2. In the Delete Job menu, **turn** and **press** either control knob to select the job you want to delete. A confirmation message will appear.
3. **Turn** and **press** the right control knob to select Delete to confirm.

7.15 Settings Menu

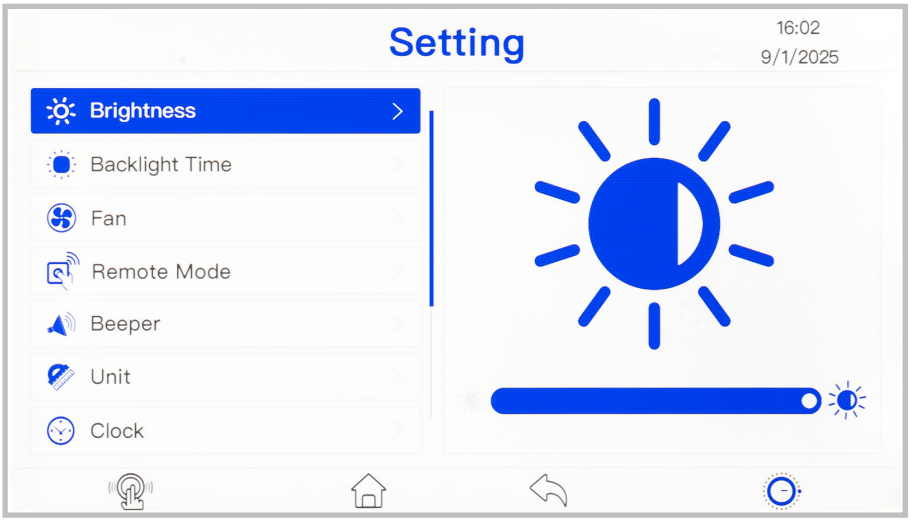

1. **Press** the Settings button to open the Settings Menu screen.
2. **Turn** the left control knob to select the setting.
3. **Turn** and/or **press** the right control knob to adjust the selected setting.

7.15.1 Settings

Setting	Value	Description
Brightness	1-18	Sets the brightness level of the screen.
Backlight Time	15min / 30min / 1h / Never	Sets the amount of time before standby mode activates.
Fan	Normal / Smart	Sets the type of fan operation.
Remote Mode	Remote OFF / Remote Torch / Remote Pedal Push-Pull Gun ON / Push-Pull Gun OFF Bluetooth Connection	Sets the remote mode of the machine. **Press** and **turn** the right control knob to scroll through the remote settings. Selecting Bluetooth Connection with a wireless foot pedal connected will open its own right side menu.
Bluetooth Connection		This menu can only be entered with a wireless foot pedal connected. • **Disconnect:** Disconnect the foot pedal from the machine. • **Rename:** Rename the device that's connected. • **Auto Connect (OFF/ON):** Set whether the foot pedal automatically connects to the machine. • **Sleep time:** Set the length of time before the pedal enters sleep mode. • **Shutdown time:** Set the length of time before the pedal shuts off.
Beeper	1-20	Sets the volume level of the beeper during machine operation.
Unit	Metric / Inch	Sets the unit of measurement.
Clock	Year / Month / Day / Hour / Minute	Sets the date and time displayed on the machine.
Current Mode		Sets the machine to 32A or 15A mode. ⚠ **32A plug must be connected to use 32A mode. Contact UNIMIG support for the password.**
Line Resistance Detection		Measures the actual cable resistance based on the type and length of the cables connected to the machine.
Information		Machine information, working time and up time.
Factory Reset	No / Yes	Factory reset the machine. **Press** the right control knob to enter the menu choice beyond the warning.
Program Update	Yes / No	Update the software version of the machine. **Press** the right control knob to enter the menu choice beyond the warning.

8. Modules & Accessories (optional)

8.1 Water Cooler

8.1.1 Package Contents

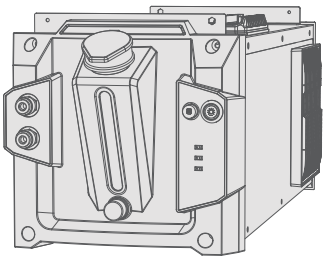

W50 Water Cooler

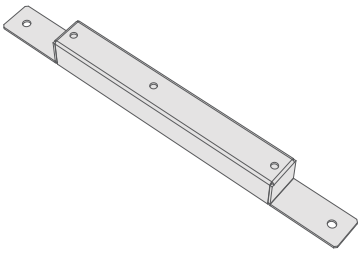

2 x Trolley Mounting Brackets



4 x M5x10 Screws

8.1.2 Machine Specifications

Parameter	Values
SKU	U11243
Primary Input Voltage	240V Single-Phase 50/60Hz
Input Current	0.8A
Tank Volume	5L
Max Distance	35m
Max Flow	10L/min
Input Capacity	220W
Size	740x265x260mm
Weight	16kg
Suits	ENVY OMNI 220 AC/DC (U11596) ENVY MULTI 250 AC/DC (U11238)

8.1.3 Key Features

Flow Monitor

Designed to safeguard and optimise the water cooler's performance by continuously checking the coolant flow rate. The flow monitor ensures smooth operation and prevents potential damage caused by insufficient flow rates.

Temperature Monitor

The temperature monitor constantly checks the coolant's temperature and works to protect the water cooler against overheating.

Closed-loop Design

The closed-loop design helps regulate the water cooler's temperature by reducing the coolant's temperature to prevent overheating and ensure optimal performance. It also works to recirculate coolant through a fan-cooled heat exchanger.

Rustproof Coolant Tank

Made of high-quality polyethylene, it provides exceptional corrosion resistance and durability. The polyethylene protects against rust and other corrosive elements to maintain the coolant's purity.

8.1.4 Water Cooler Layout

The water cooler integrates seamlessly with the modular design of the ENVY OMNI 220 AC/DC power source.

When combined, the water cooler and the power source create a single unit. Like the standalone power source, the combined power source and water cooler can be mounted on the trolley.

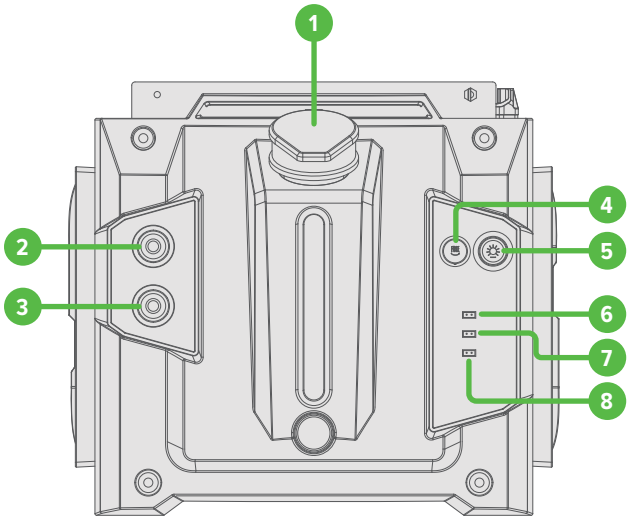

Front Panel Layout

1. Coolant Inlet
2. Coolant Flow Connection (Blue)
3. Coolant Return Connection (Red)
4. Fuse
5. Interior Light Button
6. Power Indicator Light
7. Cooler Indicator Light
8. Alarm Indicator Light

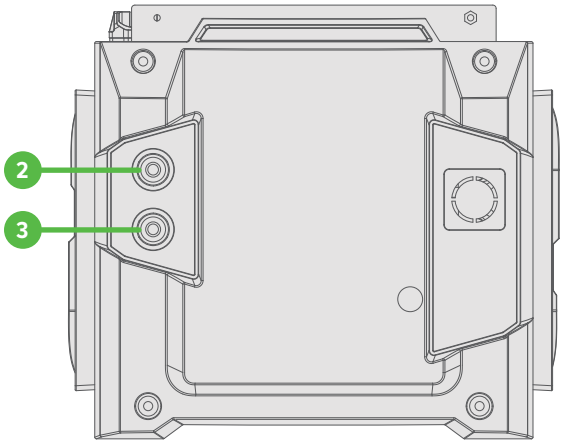

Back Panel Layout

1. Coolant Flow Connection (Blue)
2. Coolant Return Connection (Red)

8.1.5 Welding Coolant

⚠ **Using the wrong coolant can cause serious damage to the water cooler. Do not mix different coolants.**

Recommended Coolant

The water cooler is supplied without coolant.

Please fill the water cooler exclusively with original UNIMIG coolant. The use of other coolants is not advised due to concerns regarding electrical conductivity and material compatibility.

Coolant Temperature Monitoring

A temperature sensor monitors the temperature of the coolant as it returns while the machine is welding.

If the sensor detects that the temperature of the coolant exceeds 70°C, the machine will stop welding, and display error code E32. Once the sensor detects that the temperature of the coolant has fallen below 65°C, the machine will begin welding again.

Flow Monitoring

A flow sensor monitors the coolant's flow while the machine is welding.

If the sensor detects that the flow of the coolant has dropped below 1L/min, the machine will stop welding and display error code E11. The water cooler will turn off.

More coolant will need to be added to water cooler to remove this error and begin welding again.

8.1.6 Installing the Machine on the Water Cooler

⚠ **Don't connect the equipment to the wall socket/mains supply before the installation is complete.**

⚠ **Don't modify the equipment in any way except for the changes and adjustments covered in the manufacturer's instructions.**

ⓘ **Place the machine on a horizontal, stable and clean ground. Check that there is enough space for cooling air circulation in the machine's vicinity. Don't cover the machine's ventilation as it could overheat.**

ⓘ **This water cooler should only be used with UNIMIG machines and strictly for its designated purpose. Misuse or use beyond these guidelines is not permitted and any damage or errors resulting from such misuse will not be covered by the manufacturer.**

ⓘ **Tools needed:**

- **Phillips Head screwdriver**
- **7mm spanner**

1. Remove the metal bracket covering the water cooler connection port from the bottom of the machine by using a 7mm spanner.

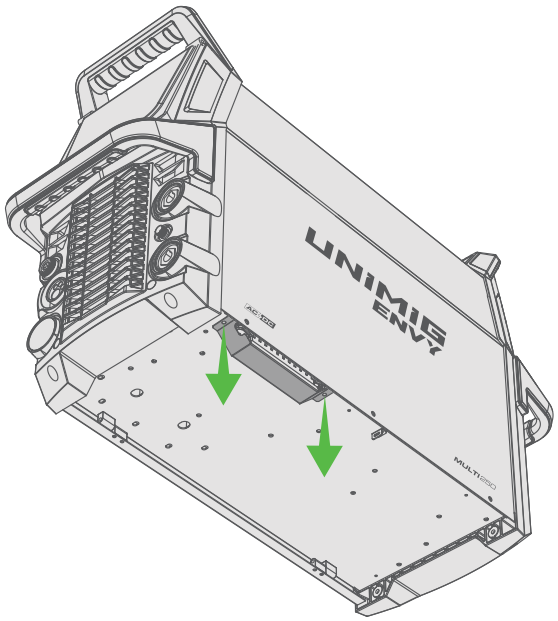

2. Remove the water cooler cover from the bottom of the machine. This can be completely removed or locked into place in the holder.

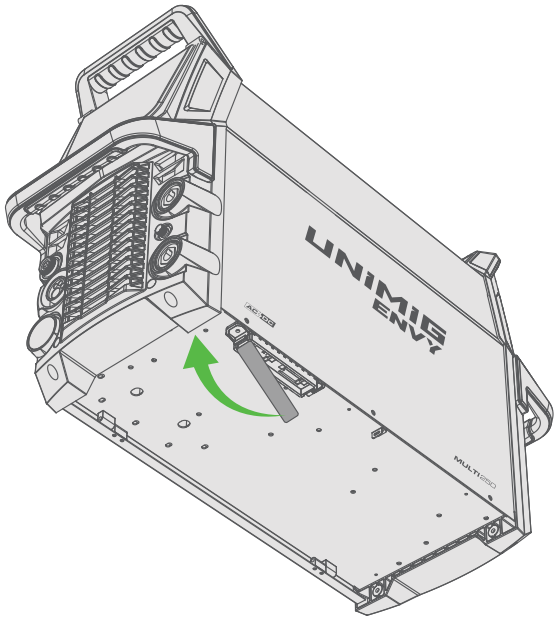

3. Unscrew the four screws in the two mounting brackets on the top of the water cooler if they are already installed.
4. Place the machine on top, lining it up so the water cooler connection port lines up and the feet of the machine sit over the mounting brackets.

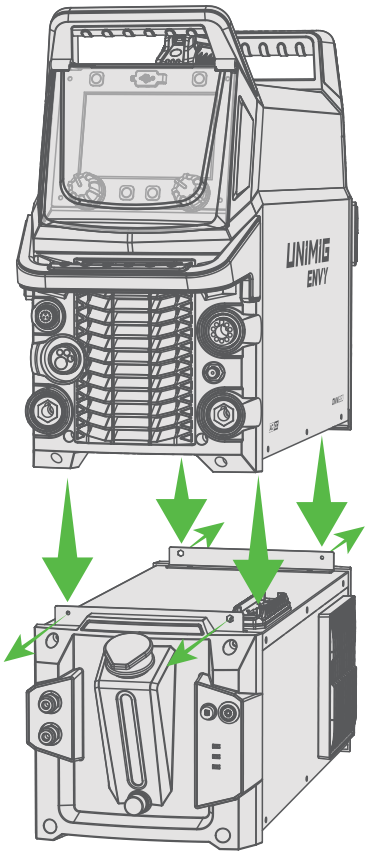

5. Screw the four screws back into the feet of the machine into the mounting bracket holes.

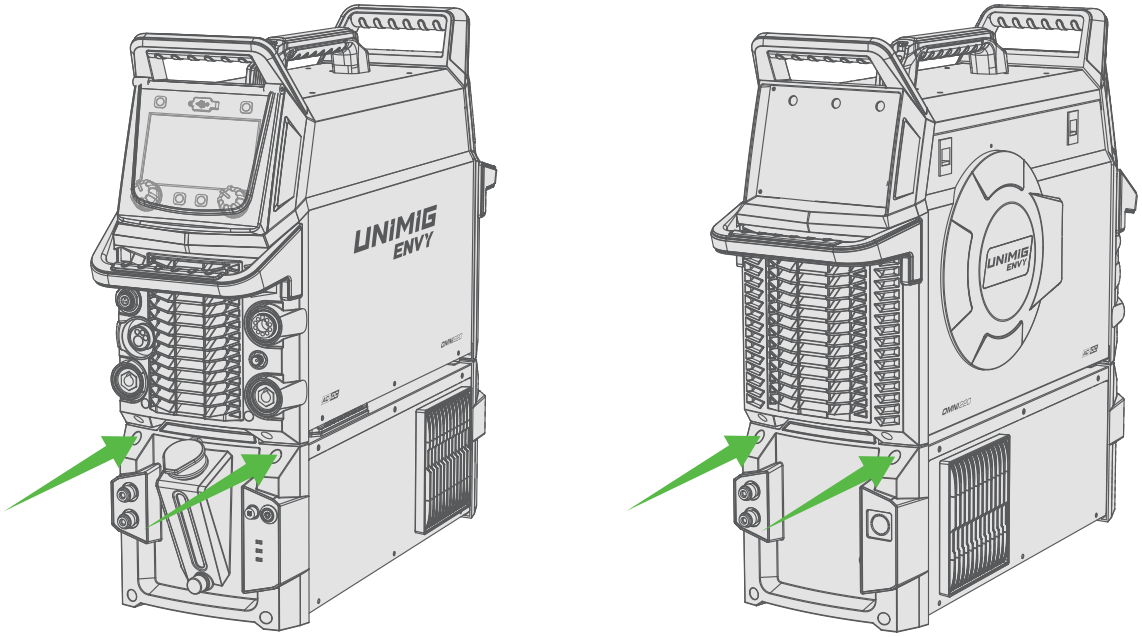

8.1.7 Connecting the Water-Cooled MIG Torch

1. Connect the MIG torch to the Euro connection, and twist to lock it in place.
2. Plug the red coolant return cable into the red output connection and the blue coolant supply cable into the blue input connection.
3. Set the polarity in the MIG parameters *(see "7.8 Manual MIG Mode" on page 82)*.

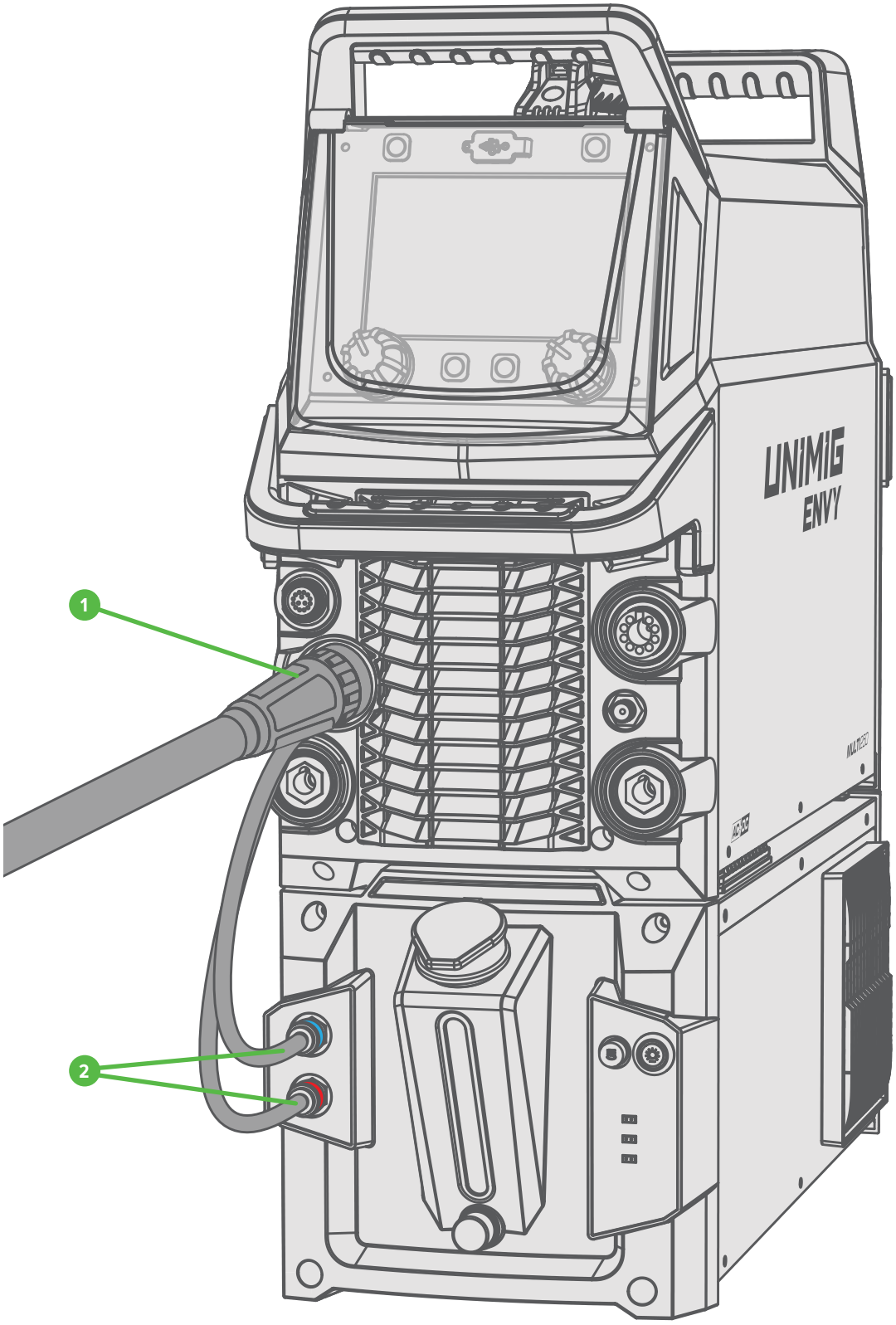

8.1.8 Connecting the Water-Cooled Push-Pull Gun

1. Connect the push-pull gun into the Euro connection and twist the end to secure it in place.
2. Insert the push-pull gun control cable into the pin socket.
3. Plug the red coolant return cable into the red output connection and the blue coolant supply cable into the blue input connection.
4. Select Push-Pull in the Remote Mode menu in the settings *(see "7.14 Settings Menu" on page 94)*.
5. Set the polarity to DCEP in the MIG parameters *(see "7.8 Manual MIG Mode" on page 82)*.

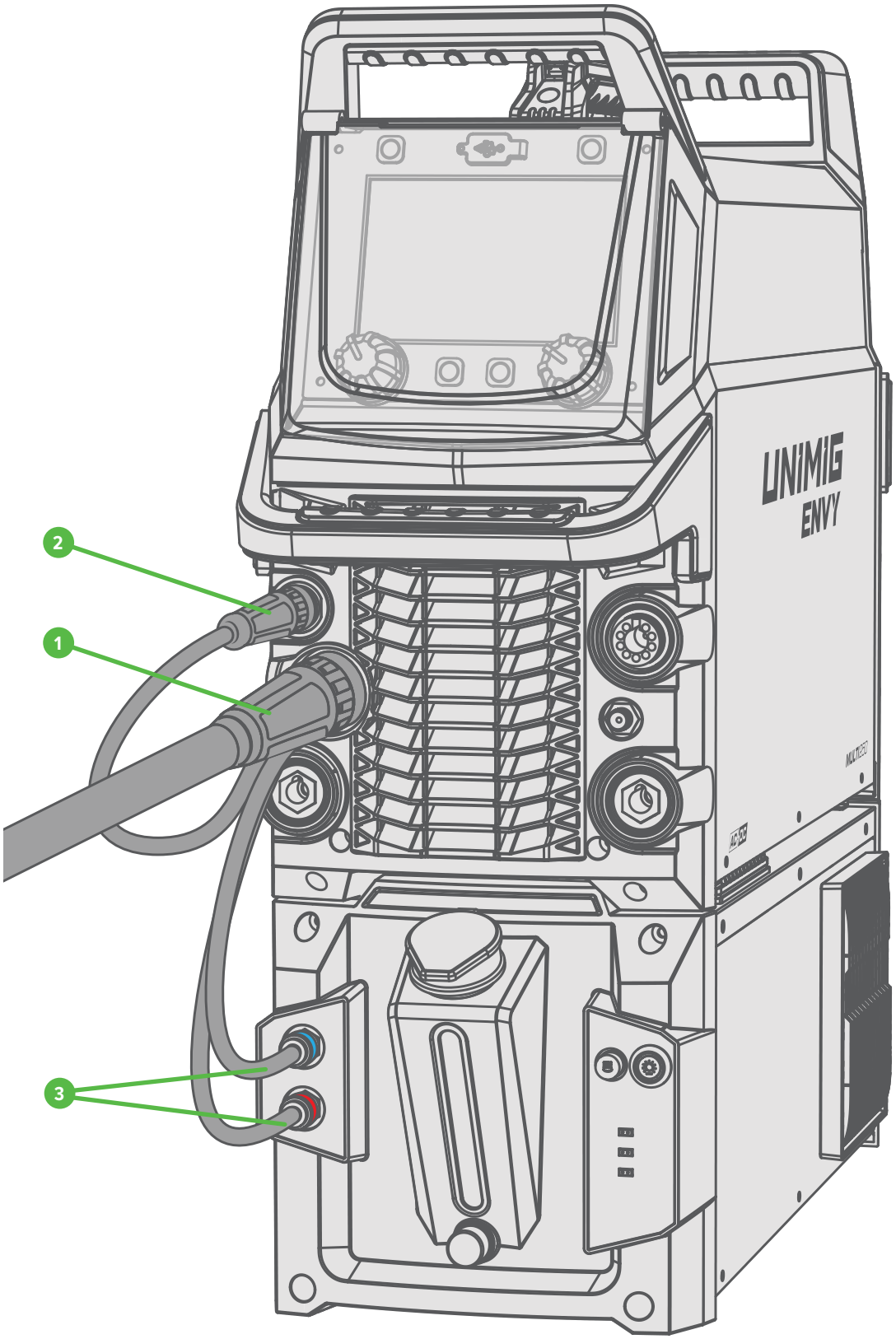

8.1.9 Connecting the Water-Cooled TIG Torch

1. Assemble the TIG torch.
2. Connect the TIG torch to the torch/electrode holder dinse connection, and twist to lock it in place.
3. Plug the red coolant return cable into the red output connection and the blue coolant supply cable into the blue input connection.
4. Plug the torch connector into the pin socket.
5. Plug the gas connector into the gas outlet.

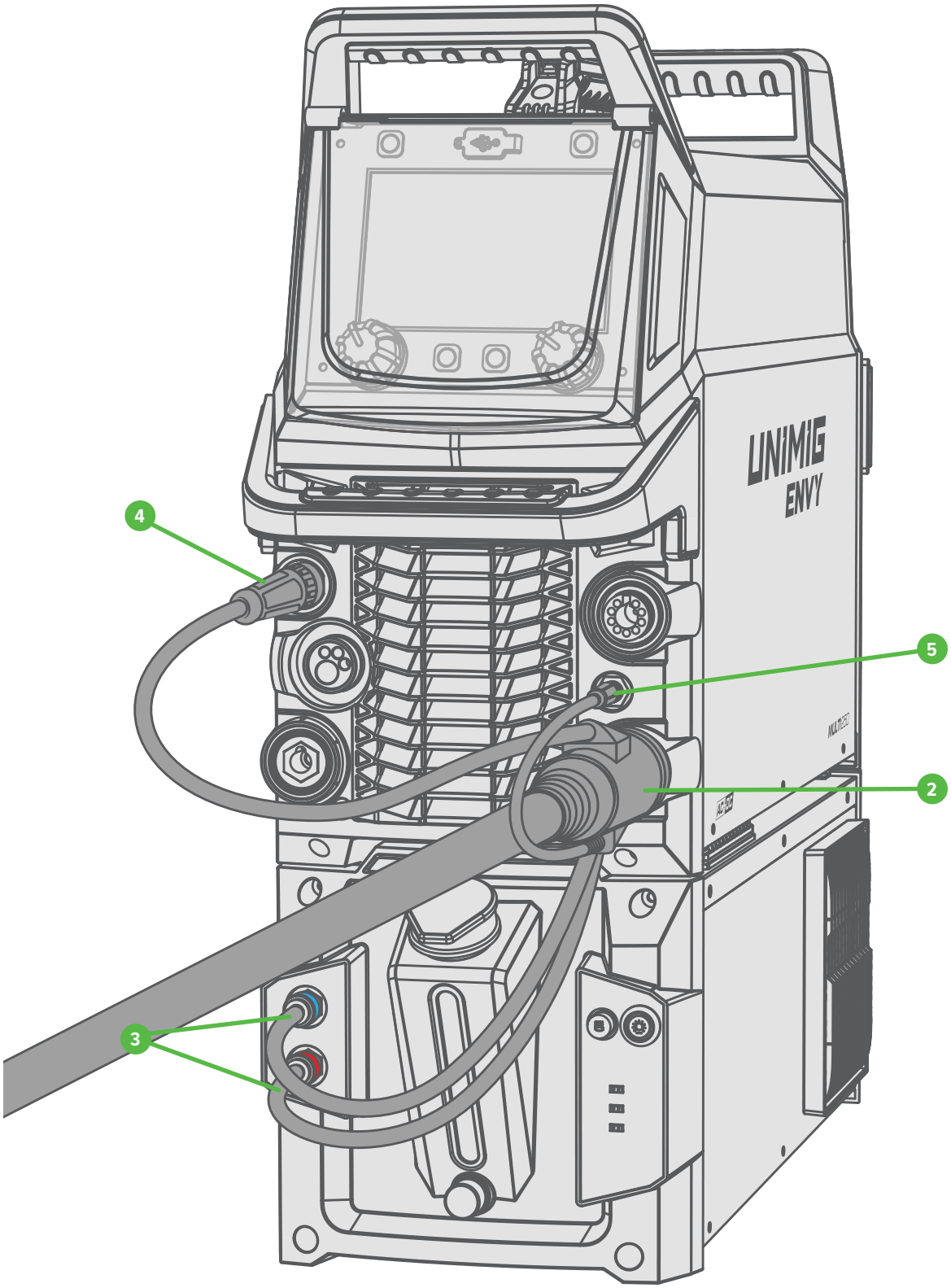

8.1.10 Filling the Water Cooler

Use the coolant pump exclusively with UNIMIG's original coolant. Running the pump dry, even briefly, can result in damage.

Be careful not to spill any coolant and watch for leaks. Remove any coolant from the exterior of the water cooler and make sure no coolant gets inside. This can damage the internal components.

1. Open the water cooler cap.
2. Fill the water cooler with coolant. Do not fill over the 'Max' line.

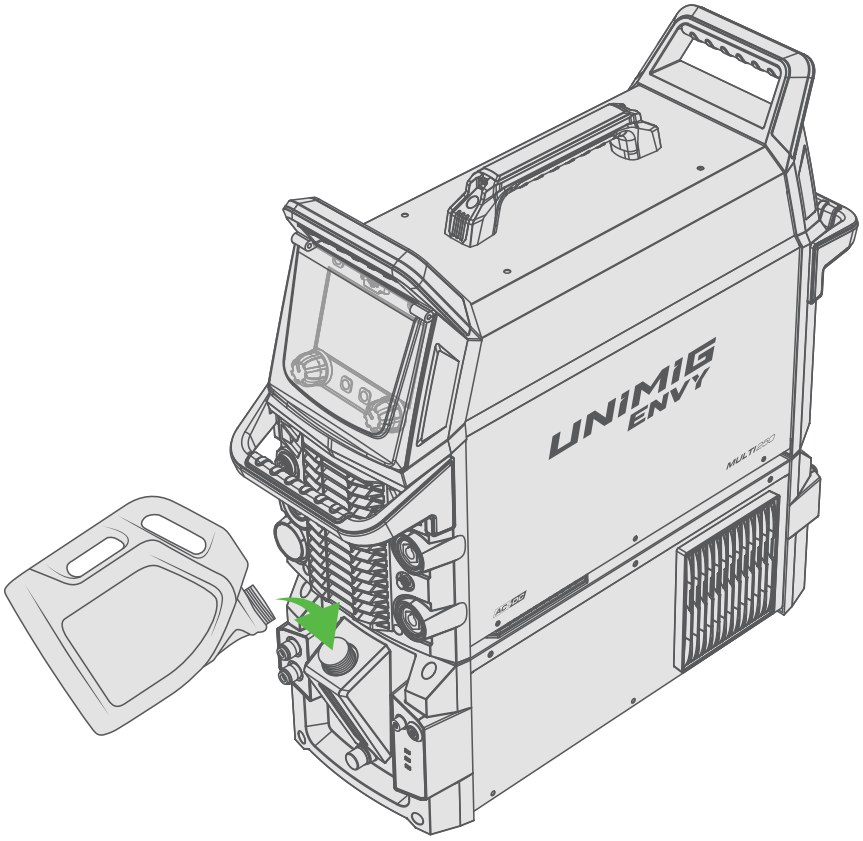

3. Close the water cooler cap.

8.1.11 Operation

Operating the Water Cooler

1. Ensure there is coolant in the tank and that the welding torch is connected.
2. Switch the ENVY OMNI 220 AC/DC to '**Water**' under **Cooling** in the Settings Menu.

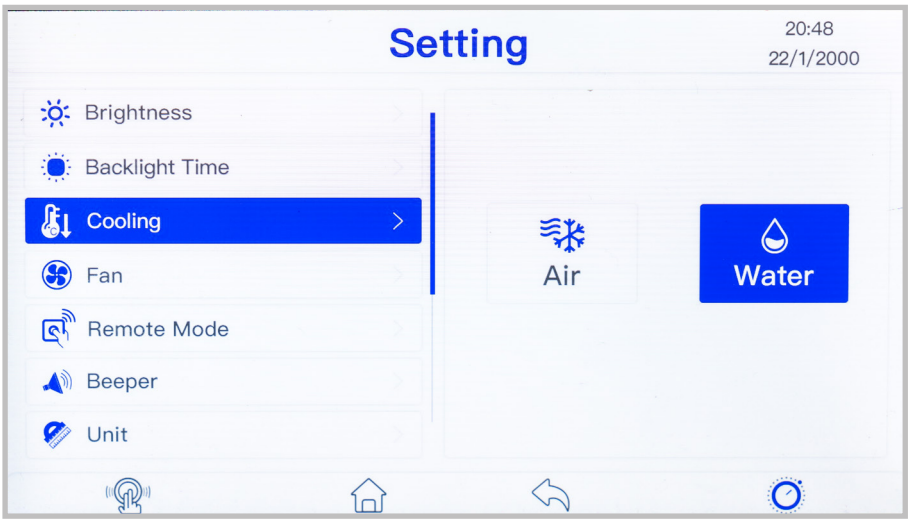

If the system detects that there isn't enough coolant in the unit, it will display error code E11, and the machine will need to be restarted to remove this error.

8.1.12 Changing the Coolant

Disconnect the equipment from the wall socket/mains supply before changing the coolant.

1. Disconnect the machine from the water cooler by undoing the four screws in the mounting brackets.
2. Remove the old coolant and safely dispose of it.
3. Pour in new coolant.

It is recommended that the coolant tank be flushed before adding new coolant. To flush the tank, fill it with water and then empty it again. You can repeat this step until it runs clear. This will prevent contamination of the new coolant and extend the lifespan of the water cooler.

8.1.13 Water Cooler Troubleshooting

The issues and potential reasons outlined are not exhaustive but indicate common scenarios that might arise with regular use of the machine.

Problem	Recommended Actions
Insufficient or no coolant flow	• The coolant level may be too low, top it up if necessary. • The coolant may be contaminated, change the coolant. • The coolant pump may be faulty, contact UNIMIG customer service.
Insufficient cooling power	• The fan may be faulty, contact UNIMIG customer service. • The coolant pump may be faulty, contact UNIMIG customer service.
The welding torch becomes very hot	• The coolant flow is inadequate, check the coolant level and top it up if necessary. • The coolant may be contaminated, change the coolant. • The coolant pump may be faulty, contact UNIMIG customer service.

8.1.14 Indicator Lights

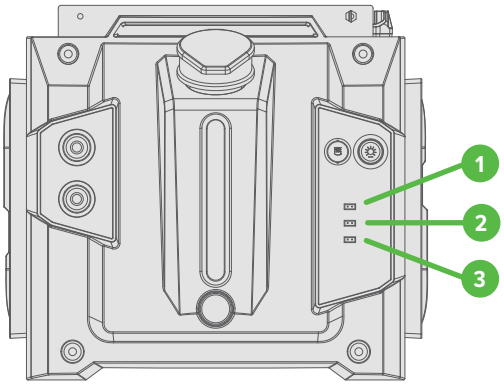

1. **Power Indicator Light:** The first indicator light is the power display. This light will be on when the welder is connected properly and powering the water cooler.
2. **Cooler Indicator Light:** The second indicator light will be on if the cooler is working normally.
3. **Alarm Indicator Light:** The third indicator light is the abnormal alarm display. This light will turn on when the cooler has insufficient water circulation or too high a water temperature.

8.1.15 Error Codes

Error Code	Name	Description	Potential Action
E11	No Water	The water cooler unit does not have enough coolant.	Add more coolant. If there is coolant in the unit, check the water cooler wiring and the motor is running. If the problem persists, contact UNIMIG customer service.
E31	Water Cooler Disconnected	The water cooler is not connected.	Check the water cooler wiring. If the problem persists, contact UNIMIG customer service.
E32	Coolant Over Temperature	The temperature of the coolant exceeds 70°C.	Wait for the coolant temperature to fall below 65°C.

The error code will display on the machine's screen, not the water cooler.

8.2 Welding Trolley

8.2.1 Package Contents

Screws & Washers



A
x36



B
x12



C
x10



D
x3



E
x4



F
x4



G
x4



H
x4

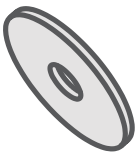

I
x2



J
x2

8.2.2 Assembly

Tools needed:

- **Phillips Head screwdriver**
- **Allen key set**

Step 1

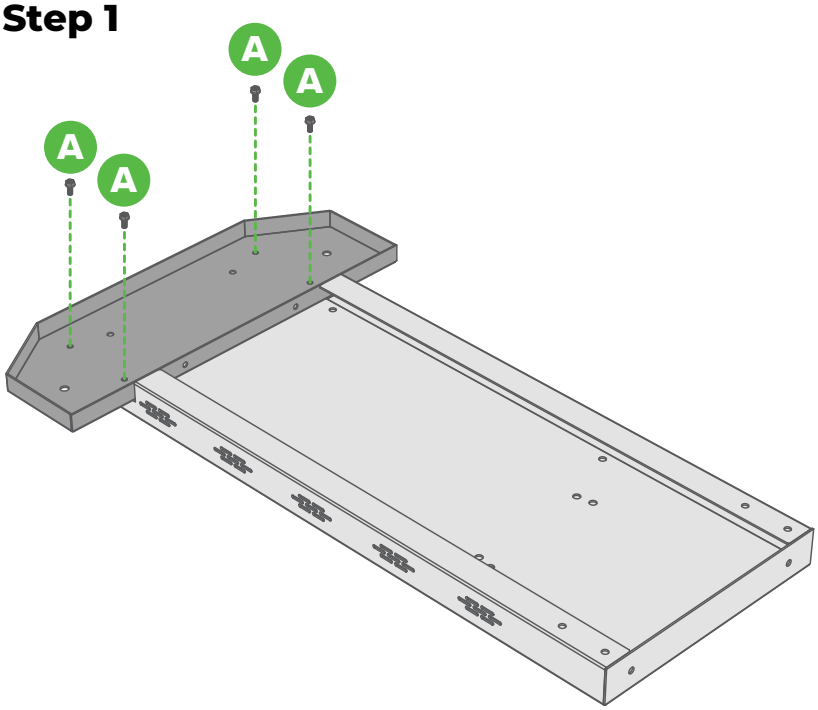

Step 2

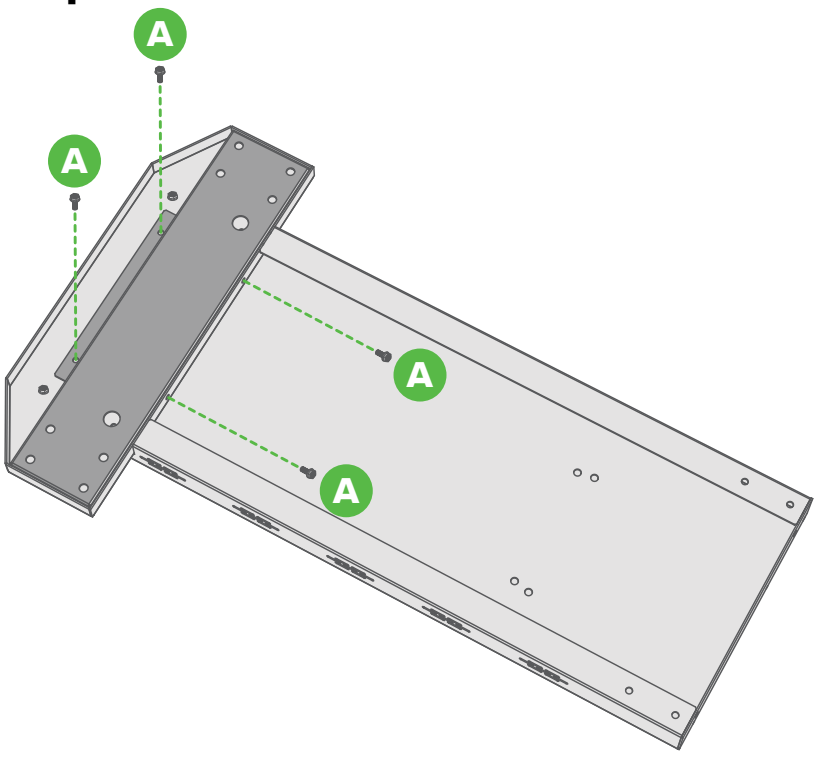

Step 3

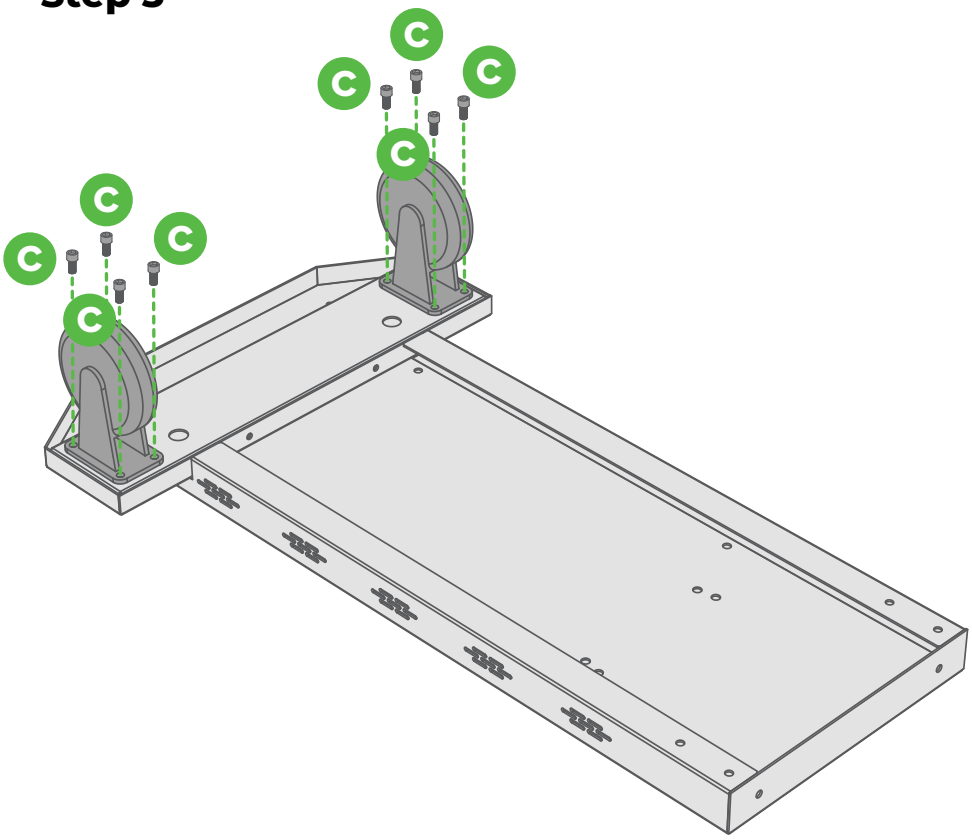

Step 4

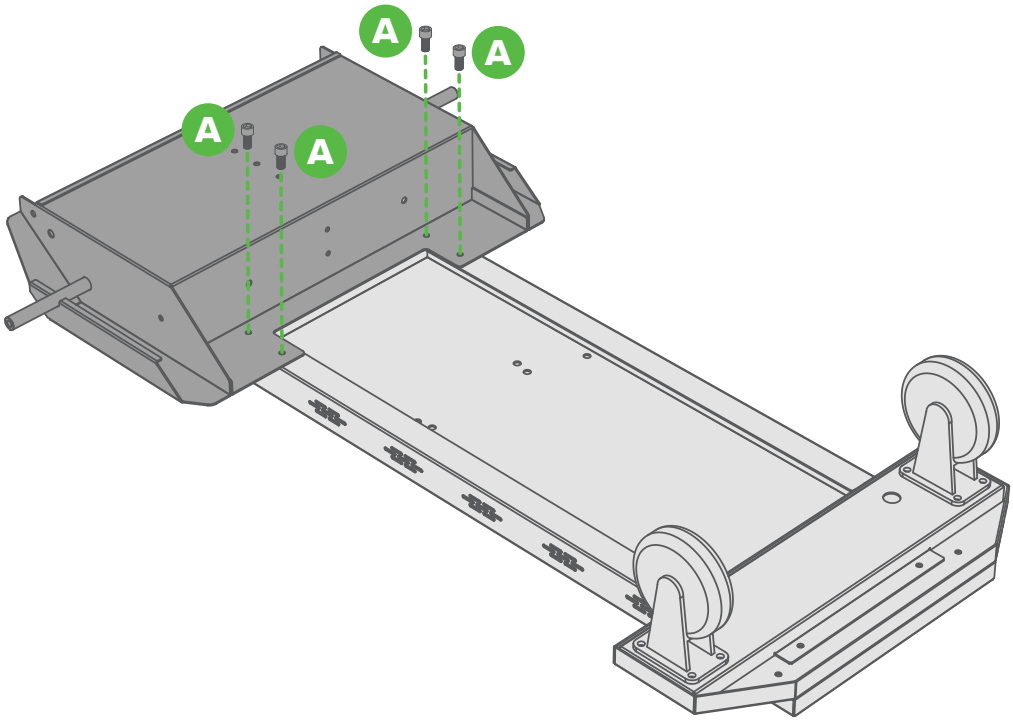

Step 5

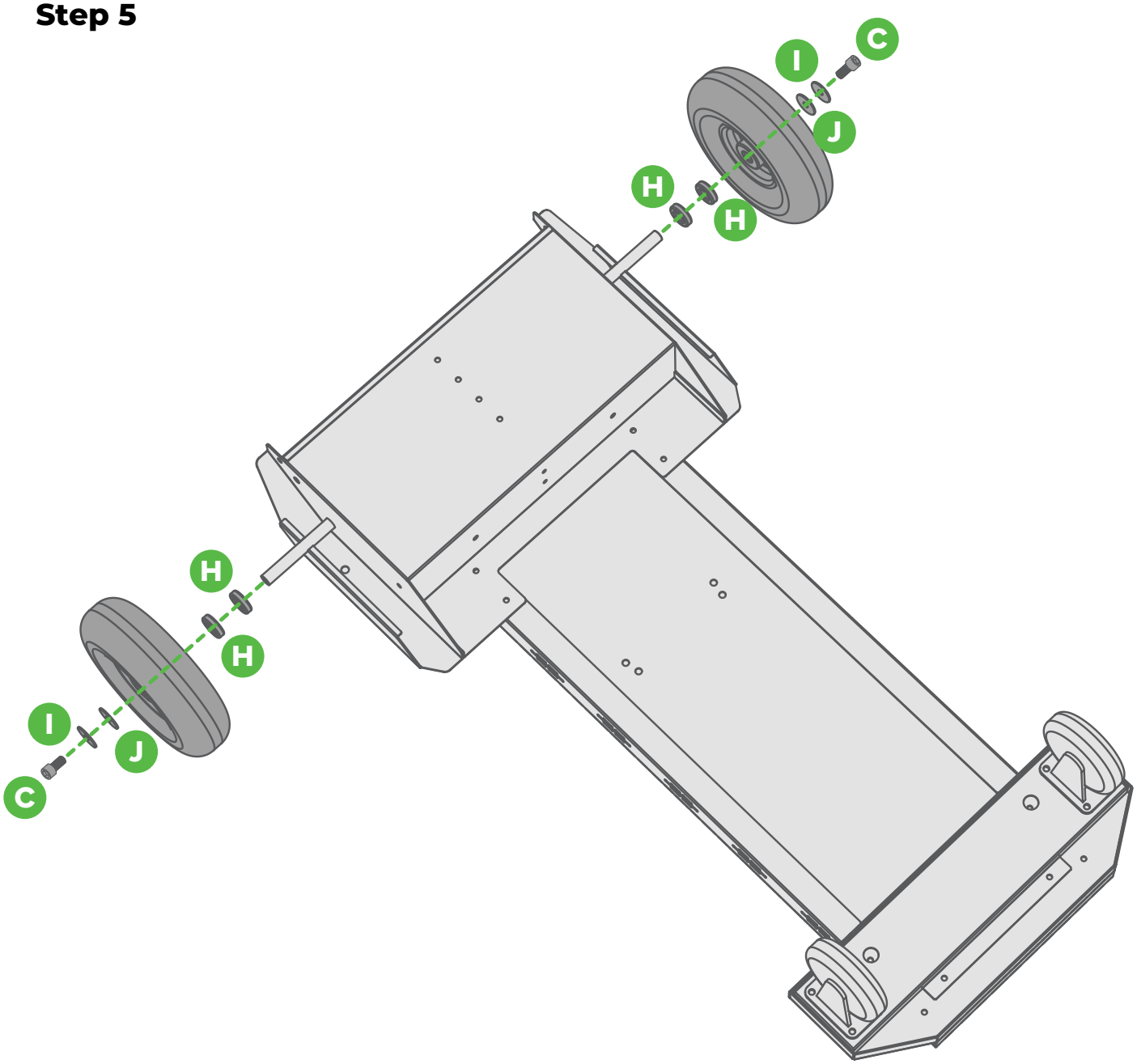

Step 6

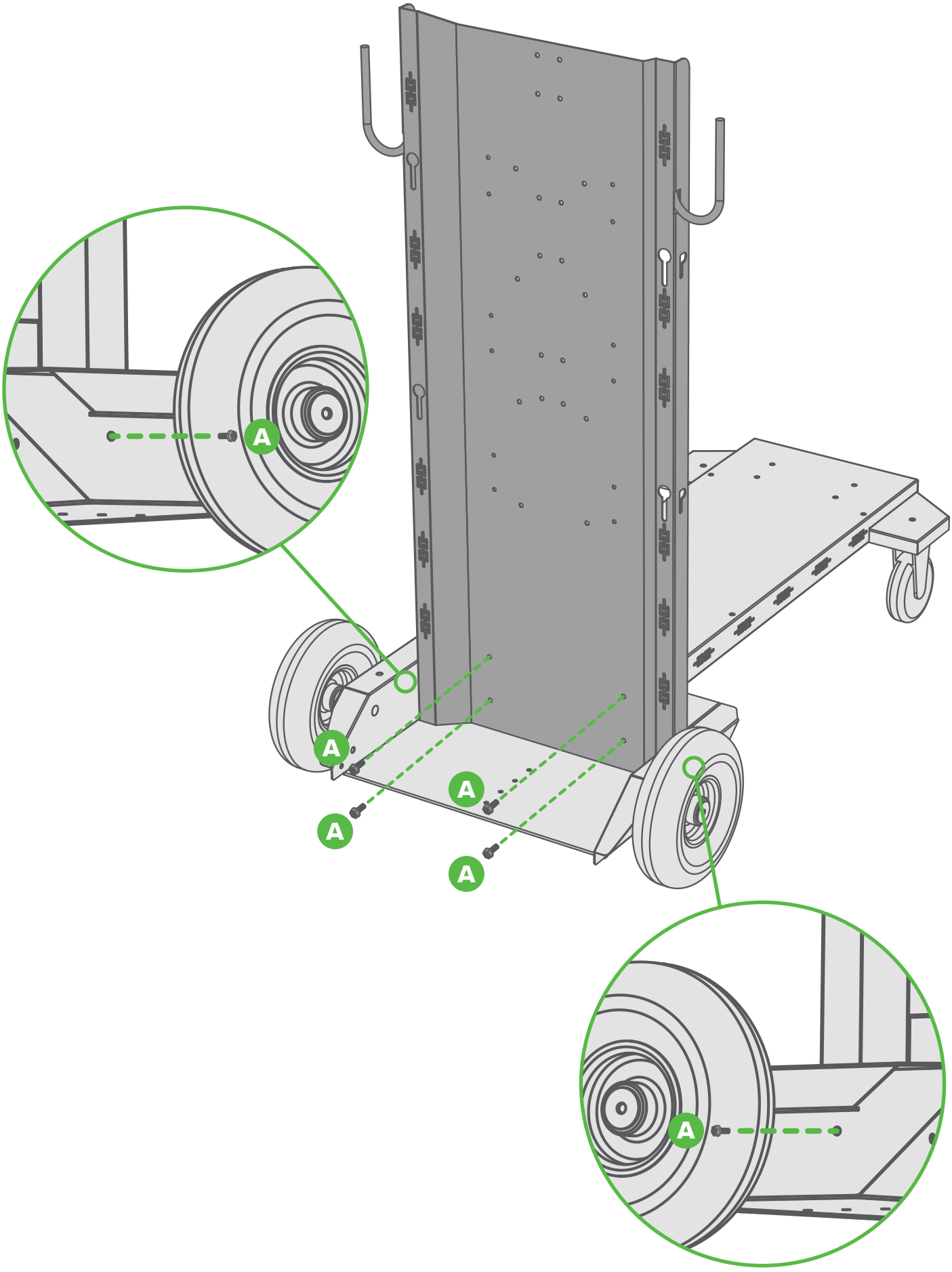

Step 7

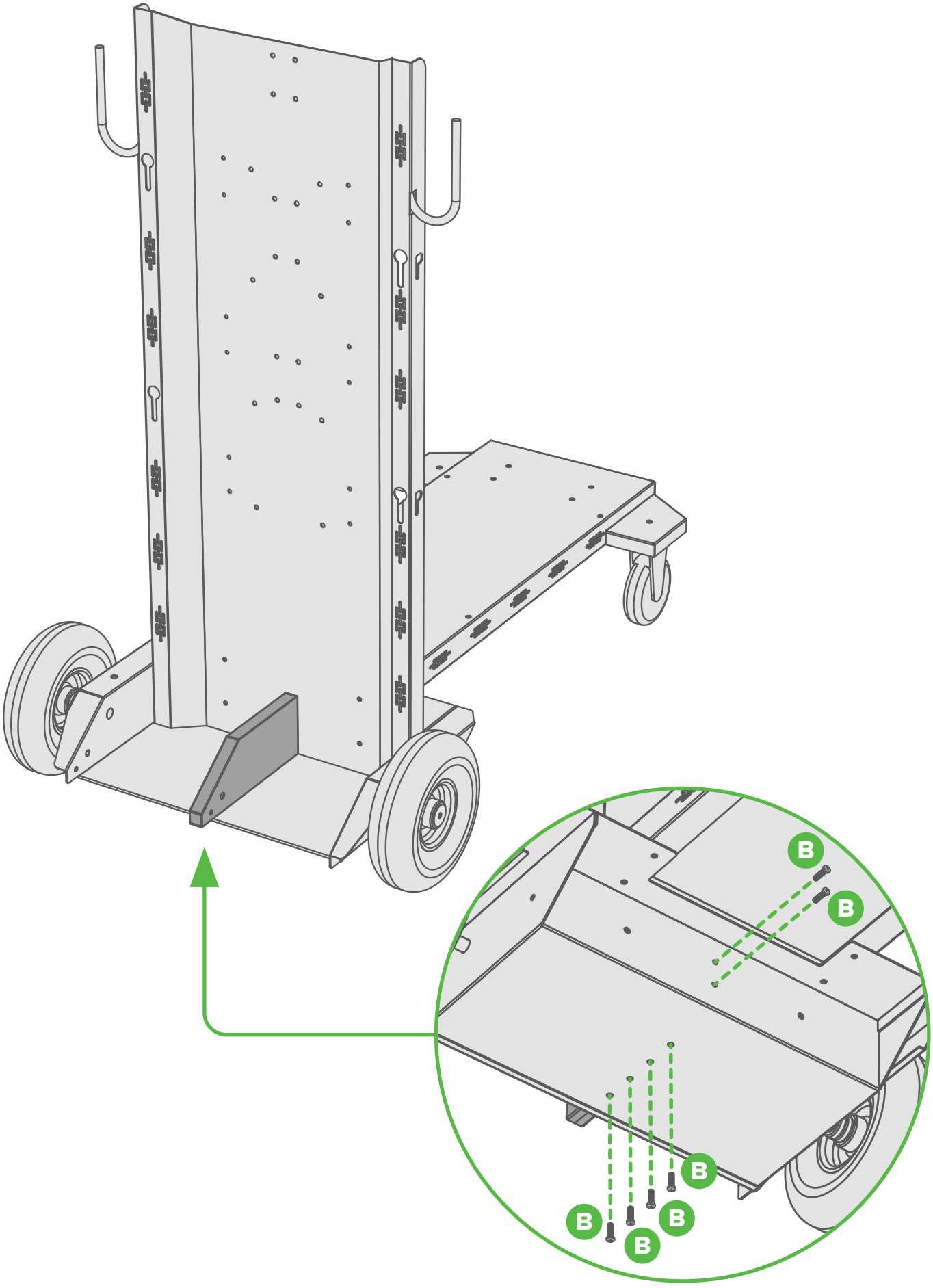

Step 8

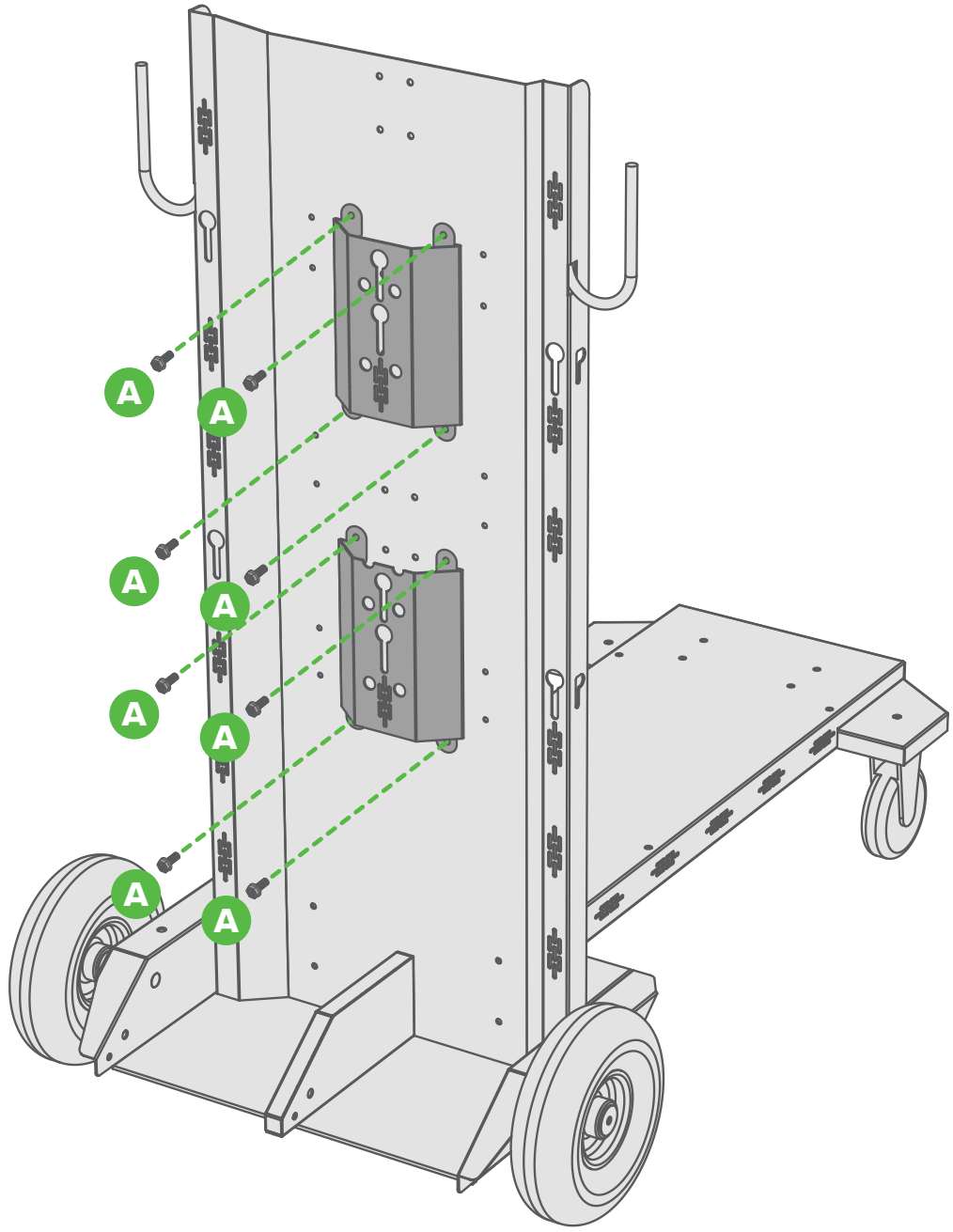

Step 9

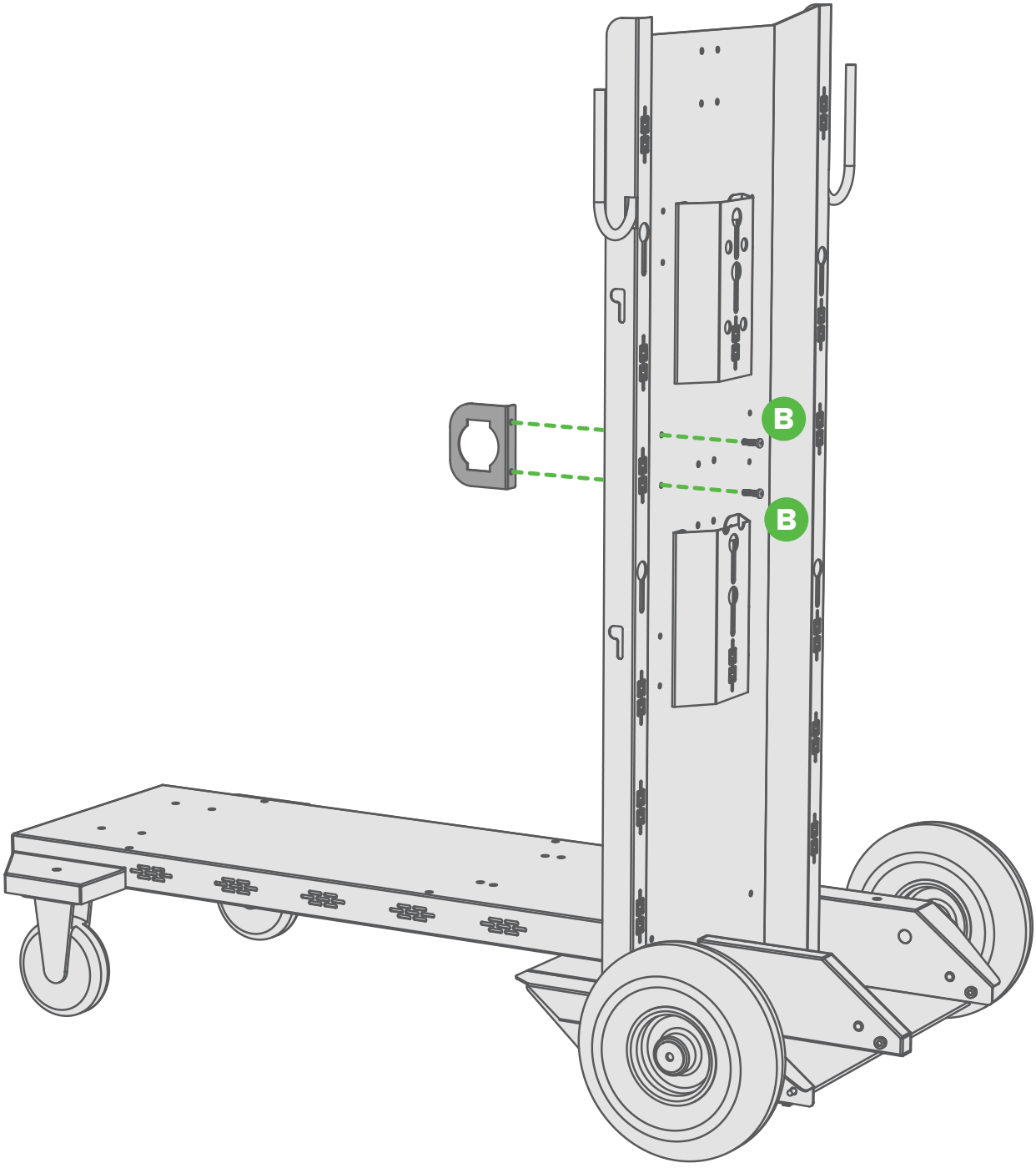

Step 10

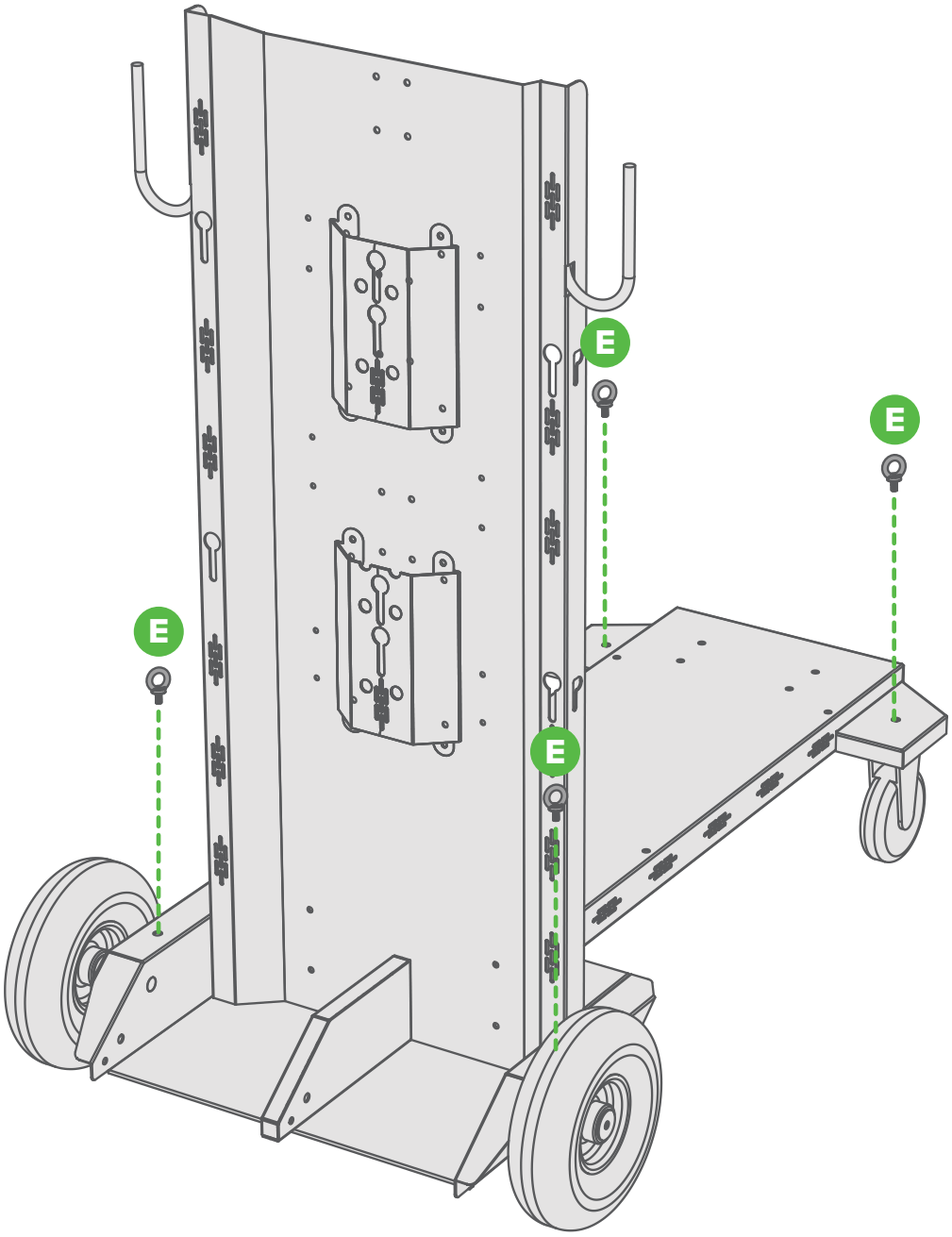

8.2.3 Installing the Machine on the Trolley

1. Attach the two L shaped mounting brackets onto the trolley.

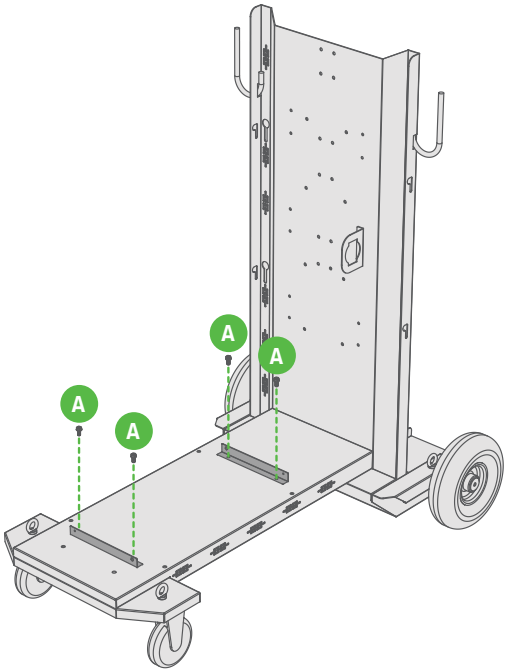

2. Place the machine on the trolley, so that the feet sit over the mounting brackets, and screw it in via the mounting points.

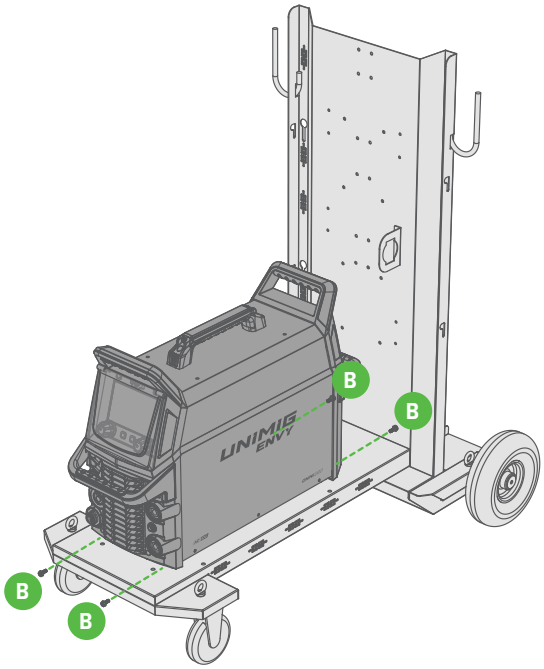

8.2.4 Installing the Water Cooler & Machine on the Trolley

1. Attach the two feet mounts to the bottom of the water cooler. It is recommended to do this before connecting the machine.

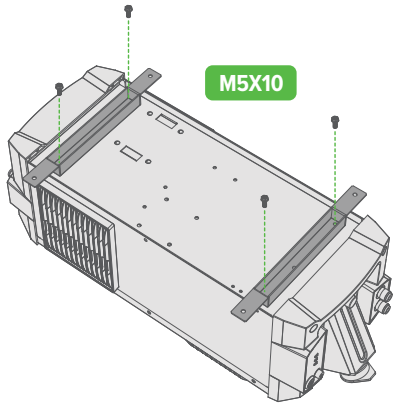

The M5X10 screws are included with the ENVY MULTI 250 AC/DC Water Cooler.

2. Place the water cooler on the trolley and screw it in via the mounting points.

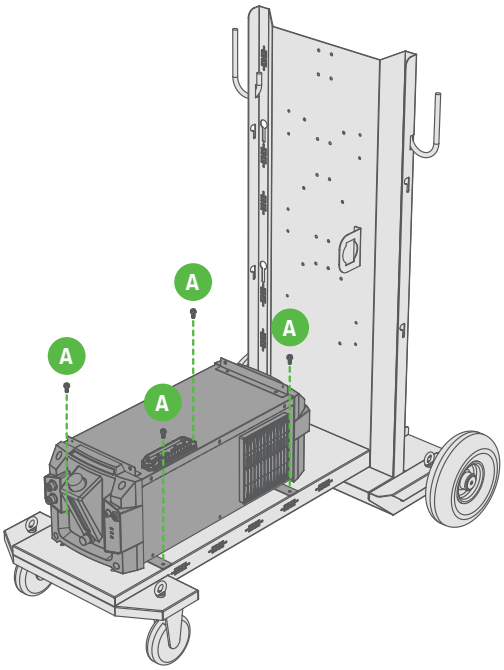

3. Place the machine on the water cooler and screw it in via the 4 mounting points.

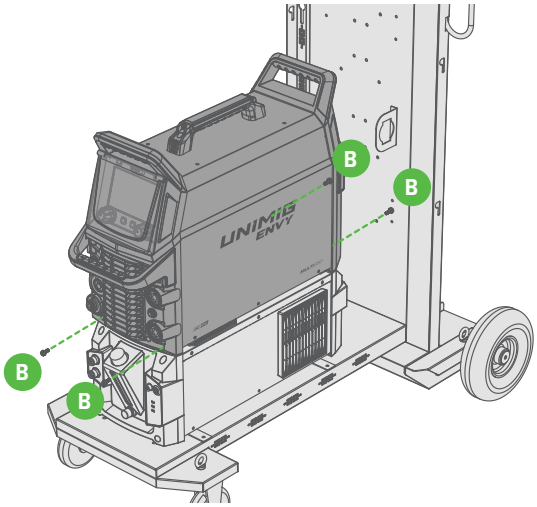

4. Unscrew the two screws holding the top handle in place and remove the handle.

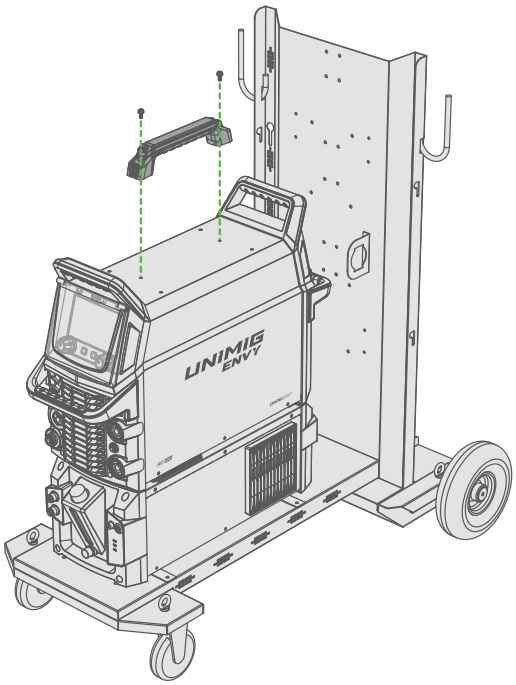

5. Unscrew the four screws on the top of the machine. Use these screws and two A screws to install the top bracket of the trolley onto the machine.

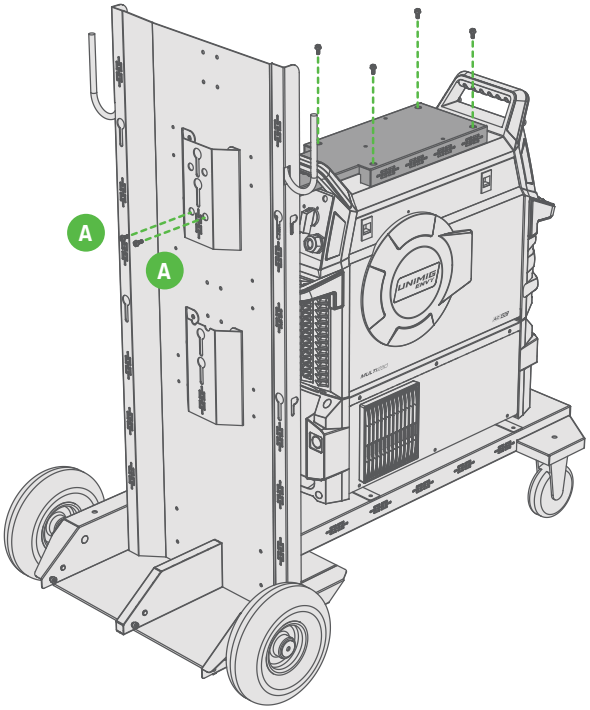

8.2.5 Installing the Gas Bottle on the Trolley

1. Move the gas bottle onto the trolley's gas bottle rack.

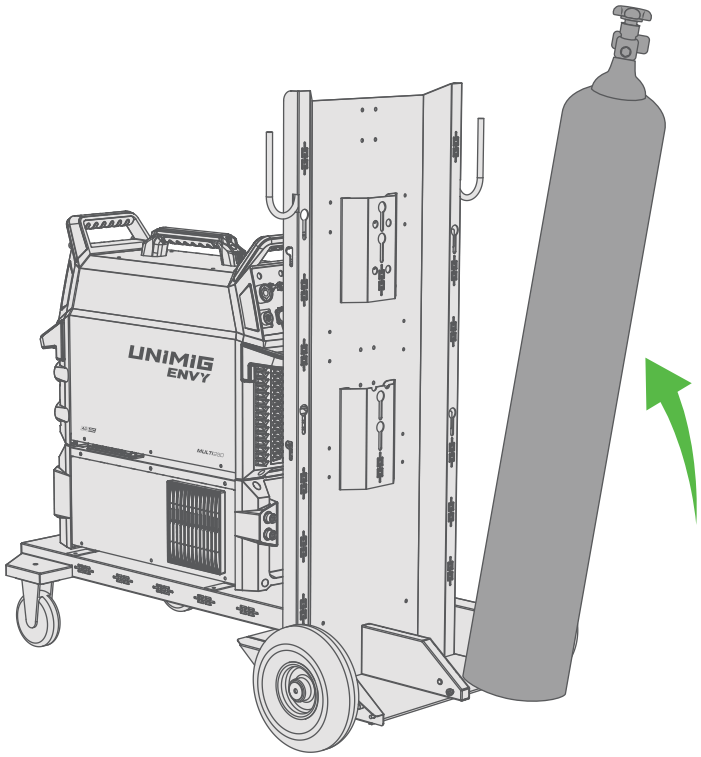

2. Secure the gas bottle in place with the chains. Use the dedicated fixing points on the trolley.

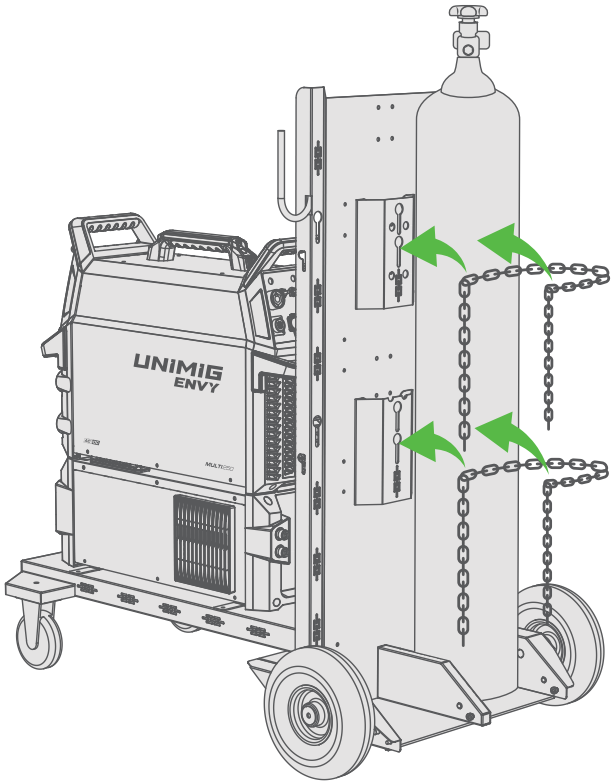

3. Repeat steps 1 & 2 to install a second gas bottle.

There is a risk of accident if the gas cylinder is improperly or inadequately secured which could result in severe injury. The cylinder must be secured with at least two of the chains.

9. Maintenance

How often the machine is used and the working environment it is in should both be considered when planning the frequency of maintenance. In severe conditions, maintenance should occur more frequently.

Proper operation of the machine and regular preventive maintenance will help avoid equipment failure, increase the life-span of the machine and ensure problem-free welding.

⚠ Turn the machine off and unplug it from the mains before beginning any maintenance.

Before each use, check your gas hose, earth clamp and cable, and power cable are in good condition. Check that all connections are properly fastened. Any loose connections can inhibit welding performance and cause damage.

- Check that all covers and components are intact.
- Check all electrical cables and connections every 6 months.
- Clean any oxidised connections and tighten them.
- Clean dirt and dust from the outside and inside of the unit with a vacuum cleaner and soft brush.

ⓘ Do not use any pressure-washing devices. Do not use compressed air, the pressure may pack the dirt even more tightly into components.

⚠ Only authorised electricians or service repair agents should carry out repairs and internal servicing.

For repairs, contact UNIMIG at unimig.com.au or contact your local dealer.

9.1 Maintaining the Plasma Consumables

How often you need to change the consumables on your plasma torch will depend on a number of factors:

- The material thickness.
- The average length of the cut.
- The air quality through the plasma cutter. The presence of oil, moisture, or other contaminants will cause more consumable wear.
- Whether the metal is being pierced or the cut starts from the edge.
- A proper torch-to-work distance when gouging or cutting with unshielded consumables.
- A proper piercing height.
- Whether it's cutting in perforated mode or normal mode. Cutting in perforated mode causes more consumable wear.

Part	Check	Recommended Action
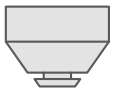 **Shield Cap**	Check the centre hole is round and that there isn't any built up residue in the gap between the shield cap and the cutting tip.	Replace the shield cap if the centre hole is no longer round. Remove the shield cap and clean any residue.
 **Cutting Tip**	Check the centre hole is round.  **Good** **Worn**	Replace the cutting tip if the centre hole is no longer round.
 **Swirl Ring**	Check the surface inside the swirl ring for damage or wear, and check the gas holes for any blockages.	Replace the swirl ring if the surface is worn or damaged or if any of the gas holes are blocked.
 **Electrode**	Check the surface for wear, and that the pit depth on the electrode's tip isn't deeper than 1.6mm. 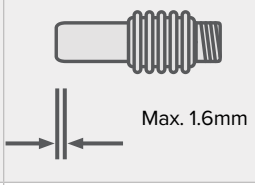 Max. 1.6mm	Replace the electrode if the surface is worn or the pit depth is greater than 1.6mm.
 **Torch O-ring**	Check the surface for damage and wear.	Replace the O-ring if it's worn or damaged.

10. Troubleshooting

The issues and potential reasons outlined are not exhaustive but indicate common scenarios that might arise with regular use of the machine.

10.1 Machine Troubleshooting

Problem	Recommended Actions
The machine does not power up	• Check that the power cable is plugged in properly. • Check that the mains switch of the power source is at the ON position. • Check that the mains power distribution is on. • Check the mains fuse and/or the circuit breaker.
The machine stops working	• The torch may have overheated. Wait for it to cool down. • Check that none of the cables are loose. • The power source may have overheated. Wait for it to cool down and see that the cooling fans work properly and the air flow is unobstructed.

10.2 MIG Troubleshooting

Problem	Recommended Actions
Excessive spatter	• The wire feed speed may be too high, select a lower wire feed speed. • The voltage may be too high, select a lower voltage setting. • The polarity may be wrong, check the polarity *(see "7.8 Manual MIG Mode" on page 82)*. • The stickout may be too long, bring the torch closer to the workpiece. • Remove materials like paint, grease, oil, and dirt, including mill scale from the base metal. Use clean, dry, rust-free wire. Do not lubricate the wire with oil, grease etc. • The gas flow may be wrong, check the gas is connected, check hoses, gas valve and torch are not restricted or leaking. Set the gas flow to the recommended flow rate.
Porosity	• Check that the correct gas is being used. The gas flow may be wrong, check the gas is connected, check hoses, gas valve and torch are not restricted or leaking. Set the gas flow to the recommended flow rate. Protect the welding zone from wind and drafts. • Remove all moisture from the base metal before welding. • Remove materials like paint, grease, oil, and dirt, including mill scale from the base metal. Use clean, dry, rust-free wire. Do not lubricate the wire with oil, grease etc. • The gas nozzle may need to be cleaned or replaced. • Check the gas diffuser is in place and replace if damaged. • Check the MIG torch Euro connect O-ring is in place and replace if damaged.
Wire stubbing during welding	• Bring the torch closer to the workpiece and maintain a stickout of 5-10mm. • The voltage may be too low, increase the voltage. • The wire feed speed may be too high, decrease the wire feed speed.

Problem	Recommended Actions
Lack of fusion	• Remove materials like paint, grease, oil, and dirt, including mill scale from the base metal. • Select a higher voltage range and/or adjust the wire speed to increase the heat input. • The welding technique being used may be incorrect *(see "MIG Welding Basics" on page 134).*
Lack of penetration	• The joint preparation may be incorrect, or the material is too thick. The joint preparation and design should allow access to the bottom of the groove while maintaining proper welding technique. • Select a higher voltage range and/or adjust the wire speed to increase the heat input. • Reduce the travel speed. • Remove materials like paint, grease, oil, and dirt, including mill scale, from the base metal.
Excessive penetration/Burnthough	• Select a lower voltage range and/or adjust the wire speed to lower the heat input. • Increase the travel speed.
The wire doesn't feed	• Check that the weld mode is set to the MIG position. • Check that the torch selection is set to the 'standard' position for MIG welding and 'spool gun' when using the spool gun.
Inconsistent/interrupted wire feeding	• The polarity may be wrong, check the polarity *(see "7.8 Manual MIG Mode" on page 82).* • The wire feed speed or voltage settings may be incorrect. • The MIG torch lead may be too long for the wire, small diameter or soft wires like aluminium don't feed well through long torch leads. • Remove any kinks in the MIG torch and reduce any sharp angles. The torch should be held as straight as possible. • Check the contact tip is the correct size and type. • The liner maybe be worn or clogged, try to clear the liner as a temporary measure. It is recommended to replace the liner. • Check the liner is the correct size and type. • Clear or replace the inlet guide tube if it's blocked or worn. • Check the wire is properly lined up in the drive roller groove. • Check the drive rollers are the correct size and type and that they're not worn. • Check the drive roller pressure - *see "6.17 Installing & Replacing the Wire" on page 44.* for how to correctly tension the rollers. • Check the tension on wire spool hub. • Check the wire isn't crossed over or tangled, if it is, remove the spool and untangle or replace the wire. • Use clean, dry, rust-free wire. Do not lubricate the wire with oil, grease etc.

10.3 TIG Troubleshooting

Problem	Recommended Actions
Tungsten burning away quickly	• Check that the correct gas is being used. • Check the gas is connected, check hoses, gas valve and torch are not restricted or leaking. Set the gas flow to the recommended flow rate. • Check the back cap is fitted correctly and that the O-ring is inside the torch body. • Check the right tungsten is being used and change the tungsten type if necessary. • Keep the shielding gas flowing 10-15 seconds after arc stoppage to prevent tungsten oxidation.
Contaminated tungsten	• Don't let the tungsten touch the weld pool. Raise the torch so that the tungsten is off the workpiece 2-5mm. • Don't let filler rod touch the tungsten during welding. Feed the filler rod into the leading edge of the weld pool in front of the tungsten.
Porosity	• Check that the correct gas is being used. • Check the gas is connected, check hoses, gas valve and torch are not restricted or leaking. Set the gas flow to the recommended flow rate. • Remove materials like paint, grease, oil, and dirt, including mill scale, from the base metal & filler rod. • Check the filler rod is correct and change if necessary.
Yellowish residue/smoke on the ceramic cup & discoloured tungsten	• Check that the correct gas is being used. • Check the gas is connected, check hoses, gas valve and torch are not restricted or leaking. Set the gas flow to the recommended flow rate. • The cup size may be too small, use a bigger cup size.
Unstable arc while welding	• Remove materials like paint, grease, oil, and dirt, including mill scale, from the base metal. • The tungsten may be contaminated, remove 10mm of the contaminated tungsten and re-grind the tungsten. • The arc length may be too long, lower the torch so that the tungsten is off the workpiece 2-5mm.
Arc wandering while welding	• Check the gas is connected, check hoses, gas valve and torch are not restricted or leaking. Set the gas flow to the recommended flow rate. • The amperage may be too low, increase the amperage. • The arc length may be too long, lower the torch so that the tungsten is off the workpiece 2-5mm. • Check that correct type of tungsten is being used and it's not contaminated. Remove 10mm of the contaminated tungsten and re-grind the tungsten. • The tungsten may be poorly prepared. Grind marks should run lengthwise with tungsten, not circular. • Remove materials like paint, grease, oil, and dirt, including mill scale, from the base metal & filler rod.
Arc difficult to start or won't start	• Check the machine set up is correct. • Check that the correct gas is being used. • Check the gas is connected, check hoses, gas valve and torch are not restricted or leaking. • Check the right type & size tungsten is being used and change the tungsten type if necessary. • Check all the connections are tight. • Connect the earth clamp directly to the workpiece.

10.4 MMA Troubleshooting

Problem	Recommended Actions
No arc	• Check the earth lead and all connections are tight. • Check that the machine is switched on and has a power supply. • Check that the weld mode is set to the MMA position.
Porosity	• The arc length may be too long, move the electrode closer to the workpiece. • Remove materials like paint, grease, oil, and dirt, including mill scale, from the base metal. • Only use dry electrodes.
Excessive spatter	• The amperage may be too high, reduce the amperage. • The arc length may be too long, move the electrode closer to the workpiece.
Lack of fusion	• The amperage may be too low, increase the amperage. • Remove materials like paint, grease, oil, and dirt, including mill scale, from the base metal. • Use the correct welding technique *(see "14. MMA Welding Guide" on page 147).*
Lack of penetration	• The amperage may be too low, increase the amperage. • Use the correct welding technique *(See "14. MMA Welding Guide" on page 147).* • Check the joint design and fit up is correct and the material isn't too thick.
Excessive penetration/Burnthrough	• The amperage may be too high, reduce the amperage. • Increase the travel speed.
Uneven weld appearance	• Use two hands where possible to hold the electrode steady. • Use the correct welding technique *(See "14. MMA Welding Guide" on page 147).*
Distortion	• The amperage may be too high, reduce the amperage. • Use the correct welding technique - *(See "14. MMA Welding Guide" on page 147).* • Check the joint design and fit up is correct and the material isn't too thick.
Unusual or poor arc characteristics	• The polarity may be wrong, check the polarity *(see "6.11 Connecting the MMA Electrode Holder" on page 35).*

10.5 Plasma Troubleshooting

Problem	Recommended Actions
The arc doesn't ignite	• The air pressure may be incorrect, check and adjust the air pressure to 75psi (0.5MPa/5bar). • Check that the torch consumables are installed properly. • Check that the torch leads are correctly connected to the machine. • Check that the earth clamp is properly connected to a clean, dry area of the workpiece.
The temperature lamp is on, and the arc doesn't ignite	• The power source is overheated. Wait for it to cool down and see that the cooling fans work properly and the airflow is unobstructed.
The arc stops while cutting and won't restart	• The power source may have overheated. Wait for it to cool down and see that the cooling fans work properly and the airflow is unobstructed. • Check the torch consumables for wear and replace any that are worn.
The arc doesn't transfer to the workpiece	• Check that the earth clamp is properly connected to a clean, dry area of the workpiece and replace if damaged. • The pierce height distance may be too large. Move the torch closer to the workpiece and start the arc again.
The arc is hard to start	• Check the torch consumables for wear and replace any that are worn.

Problem	Recommended Actions
The arc sputters and hisses	• The air pressure may be incorrect, check and adjust the air pressure to 75psi (0.5MPa/5bar). • Check that the torch consumables are installed properly. • Check the air hose line for moisture. Replace or install additional air filtration to the power source *(see "6.22 Installing Additional Air Filters" on page 68).*
The arc blows out but re-ignites when the torch trigger is pressed again	• Check the torch consumables for wear and replace any that are worn. • The air pressure may be incorrect, check and adjust the air pressure to 75psi (0.5MPa/5bar).
Low cutting output	• The amperage may be incorrect, adjust the amperage.
No airflow	• Check that the air compressor is connected properly and that the air pressure is correct, adjust the air pressure to 75psi (0.5MPa/5bar).
The torch does not cut completely through the workpiece	• Check that gouging consumables aren't installed instead of cutting consumables. • The air pressure may be incorrect, check and adjust the air pressure to 75psi (0.5MPa/5bar). • Remove materials like paint, grease, oil, and dirt, including mill scale, from the base metal. • Check the torch consumables for wear and replace any that are worn. • Check that the earth clamp is properly connected to a clean, dry area of the workpiece and replace if damaged. • The amperage may be too low, increase the amperage. • The metal being cut is too thick for the maximum capacity of the machine. • The cut speed may be too fast. Reduce the cut speed.
Dross forms on the bottom of the cut	• The air pressure may be incorrect, check and adjust the air pressure to 75psi (0.5MPa/5bar). • Check the torch consumables for wear and replace any that are worn. • The cut speed may be incorrect. Adjust the cut speed. • The amperage may be too low, increase the amperage.
The cut angle is not square	• The torch is not square to the workpiece. • The air pressure may be incorrect, check and adjust the air pressure to 75psi (0.5MPa/5bar). • Check the torch consumables for wear and replace any that are worn. • The direction of travel may be incorrect *see "Cut Direction & Angle" on page 152.* for the proper technique. • The torch height from the workpiece may be incorrect. • The cut speed may be incorrect. Adjust the cut speed.
The cut is poor quality	• The amperage may be too low, increase the amperage. • The cut speed may be incorrect. Adjust the cut speed. • Check the air hose line for moisture. Replace or install additional air filtration to the power source *(see "6.22 Installing Additional Air Filters" on page 68).* • The metal being cut is too thick for the maximum capacity of the machine. • Check that gouging consumables aren't installed instead of cutting consumables. • Check the torch consumables for wear and replace any that are worn. • The air pressure may be incorrect, check and adjust the air pressure to 75psi (0.5MPa/5bar). • Check the air hose line for moisture. Replace or install additional air filtration to the power source *(see "6.22 Installing Additional Air Filters" on page 68).* • Check that the machine in is the correct cutting mode *(see "7.2 Control Panel Layout & Operation" on page 71).*
The consumable life is shorter than expected	• The air pressure may be incorrect, check and adjust the air pressure to 75psi (0.5MPa/5bar). • The amperage, travel speed, and other variables may be incorrect for the material being cut. • The pierce height distance may be too large. Move the torch closer to the workpiece. • Check the air hose line for moisture. Replace or install additional air filtration to the power source *(see "6.22 Installing Additional Air Filters" on page 68).*

10.6 Error Codes

Error Code	Name	Description	Potential Action
E01	**Over Temperature**	The welder is overheating.	Check the fan is operating, wait for the welder to cool down. If the problem persists, contact UNIMIG customer service.
E02	**Over Temperature**	The welder is overheating.	Check the fan is operating, wait for the welder to cool down. If the problem persists, contact UNIMIG customer service.
E03	**Over Temperature**	The welder is overheating.	Check the fan is operating, wait for the welder to cool down. If the problem persists, contact UNIMIG customer service.
E04	**Over Temperature**	The welder is overheating.	Check the fan is operating, wait for the welder to cool down. If the problem persists, contact UNIMIG customer service.
E05	**Over Temperature**	The welder is overheating.	Check the fan is operating, wait for the welder to cool down. If the problem persists, contact UNIMIG customer service.
E06	**Over Temperature**	The welder is overheating.	Check the fan is operating, wait for the welder to cool down. If the problem persists, contact UNIMIG customer service.
E07	**Over Temperature**	The welder is overheating.	Check the fan is operating, wait for the welder to cool down. If the problem persists, contact UNIMIG customer service.
E08	**Over Temperature**	The welder is overheating.	Check the fan is operating, wait for the welder to cool down. If the problem persists, contact UNIMIG customer service.
E09	**Over Time of Continuously Welding**	The welder has reached its duty cycle.	Wait for the welder to cool down.
E10	**Phase Loss**	The input power cable is out of phase.	Check the input cable is securely connected, and check the voltage coming from the outlet and try a different outlet. If the problem persists, contact UNIMIG customer service.
E11	**No Water**	The water cooler unit does not have enough coolant.	Add more coolant. If there is coolant in the unit, check the water cooler wiring and the motor is running. If the problem persists, contact UNIMIG customer service.
E12	**Low Air Pressure Error**	The input air pressure is too low.	Check the air compressor is securely connected, and check the air pressure is set correctly. If the problem persists, contact UNIMIG customer service.
E13	**Low Input Power**	The machine isn't getting enough voltage to operate.	Remove extension leads or try a different outlet. If the problem persists, contact UNIMIG customer service.
E14	**High Input Power**	The machine is receiving too much voltage, which can cause damage to the internal components.	Try a different outlet. If the problem persists, contact UNIMIG customer service.
E15	**Over Current**	The machine output is exceeding its limit.	If the problem occurs, contact UNIMIG customer service.
E18	**Wire Speed Feedback Error**	Wire Speed Feedback cannot be detected	If the problem occurs, contact UNIMIG customer service.
E19	**PFC Circuit Error**	The PFC board in the machine isn't working.	If the problem occurs, contact UNIMIG customer service.
E20	**Weak Voltage**	The voltage (+15V,-15V,5V or 24V) is weak or not working correctly.	If the problem occurs, contact UNIMIG customer service.
E21	**Current Transformer Cable Unplugged**	The Current Transformer cable inside the machine is unplugged.	Check the current transformer's wiring. If the problem persists, contact UNIMIG customer service.
E31	**Water Cooler Disconnected**	The water cooler is not connected.	Check the water cooler wiring. If the problem persists, contact UNIMIG customer service.

Error Code	Name	Description	Potential Action
E32	**Coolant Over Temperature**	The temperature of the coolant exceeds 70°C.	Wait for the coolant temperature to fall below 65°C.
E40	**Master and Slave Disconnected**	**If a SWF unit is connected: the communication data between the power supply and the separate wire feeder is physically disconnected. If a SWF unit is not connected: the communication data between the control PCB and the display PCB is physically disconnected.**	Check the wire between the control board and the display board. If the problem persists, contact UNIMIG customer service.
E41	**Communication Data Error**	The communication protocol between the power source and the wire feeder has failed or is incompatible.	If the problem occurs, contact UNIMIG customer service.
E42	**Password Error**	Main board password is wrong.	The screen calibration may have failed, try again. If the problem persists, contact UNIMIG customer service.
E43	**Communication Data Error 2**	There is a problem with the communication data between the wire fedder display PCB and the wire feeder gun check PCB.	If the problem occurs, contact UNIMIG customer service.
E50	**Read Flash Error**	Incorrect data has been read from the flash drive/USB, resulting in the loss of key parameters required for normal operation.	If the problem occurs, contact UNIMIG customer service.
E60	**Thermistor Unplgged**	The thermistors inside the machine is unplugged.	Check the thermistors wiring. If the problem persists, contact UNIMIG customer service.
E90	**Program Upgrade Timeout**	The software update has timed out.	Restart the machine and try the update again. If the problem persists, contact UNIMIG customer service.

11. General Welding Information

11.1 Metal Preparation

Proper preparation of the metal surface is crucial for achieving a good quality weld and cannot be overstated. Each type of metal may require slightly different approaches, especially in terms of cleaning and edge preparation, to adapt to its specific properties and behavior during welding.

Mild Steel

- **Cleaning:** Start by removing any rust, paint, oil, or grease from the surface. Use a wire brush or grinder to clean the metal. It's essential to start with a clean surface to avoid contamination of the weld pool.
- **Degreasing:** Wipe down the surface with a solvent such as acetone or a commercial degreaser to remove any residual oils or contaminants that might interfere with the welding process.
- **Edge Preparation:** If welding thicker pieces, bevel the edges to allow the weld to fully penetrate the joint. The angle and depth of the bevel depend on the thickness of the metal.
- **Fit up:** Ensure that the pieces to be welded fit together well without large gaps. A good fitup helps achieve a strong and uniform weld.

Stainless Steel

- **Cleaning:** Similar to mild steel, all surfaces must be cleaned of any contaminants. Use a stainless steel wire brush (one dedicated to stainless steel to avoid cross-contamination with other metals) to remove any surface debris.
- **Degreasing:** Clean the surface with a high-purity solvent like acetone to remove any oils or residues. This step is crucial for stainless steel to prevent any interference with the weld quality.
- **Edge Preparation:** Bevel the edges if necessary, especially for thicker pieces. Stainless steel requires precise edge alignment to ensure a quality weld, so take extra care during this step.
- **Avoiding Contamination:** Use dedicated tools for stainless steel to avoid iron contamination from regular steel tools. This can lead to rust and corrosion.

Aluminium

- **Cleaning:** Aluminium oxidises very quickly when exposed to air. Use a stainless steel wire brush to remove the oxide layer just before welding, as this layer can contaminate the weld pool if not removed.
- **Degreasing:** Clean the metal with a solvent like acetone immediately after brushing to ensure that no oils or moisture are present, which can cause porosity in the welds.
- **Edge Preparation:** Beveling may be necessary depending on the thickness of the metal. Aluminium requires careful preparation as it is more sensitive to heat and can warp easily.
- **Drying:** Aluminium has a high affinity for moisture, so ensure that the metal is completely dry before welding. Moisture can lead to hydrogen porosity in the weld.

11.2 Bevelling

The standard bevel for pipe and plate in welding is primarily determined by the thickness of the materials and the type of weld joint being prepared. Bevelling is done to ensure that the weld can fully penetrate the joint, which is crucial for the structural integrity of the weld. It is primarily used to prepare butt joints for welding.

Here's a general breakdown of typical bevels used for both pipes and plates:

Thickness below 3mm: Typically, no bevelling is required for material thinner than 3mm. A square butt joint is usually sufficient as the weld can penetrate through the entire thickness.

Thickness 3mm to 12mm: A single-V bevel is often used. The angle might start from about 30° for thinner sections up to about 37.5° for closer to 12mm thick material.

Thickness above 12mm: Double-V bevels become more common as the thickness increases, reducing the amount of filler material needed and ensuring better weld penetration.

The specific bevel angle and type also depend on the welding standards being followed (such as AWS, ASME, etc.), the welding process used, and the requirements of the specific project or industry. For precise applications, always refer to the welding specification or consult a welding engineer to determine the most appropriate bevel for a given situation.

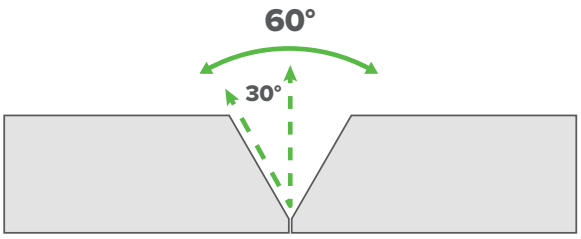

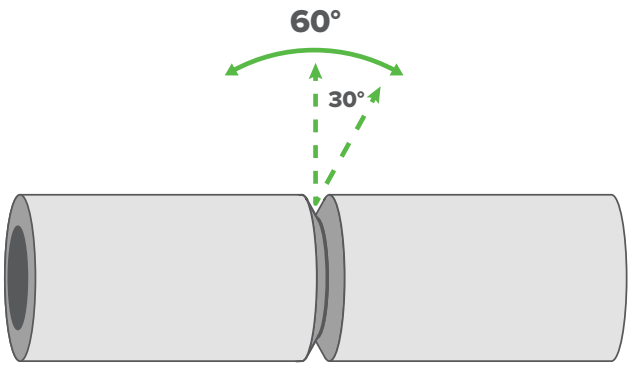

12. MIG Welding Guide

What is MIG Welding?

Metal Inert Gas (MIG) welding is an arc welding process in which a solid wire electrode is continuously fed through a welding gun into a weld pool. An arc is formed between the wire electrode and base metal, melting the base material while consumable filler wire is deposited, creating the weld.

At the same time, a shielding gas is fed through the welding torch to protect the weld from outside contaminants.

MIG welding is also known as Gas Metal Arc Welding (GMAW).

MIG welding can be done with both solid wires and flux-cored wires. Flux-cored welding is a variant of MIG welding.

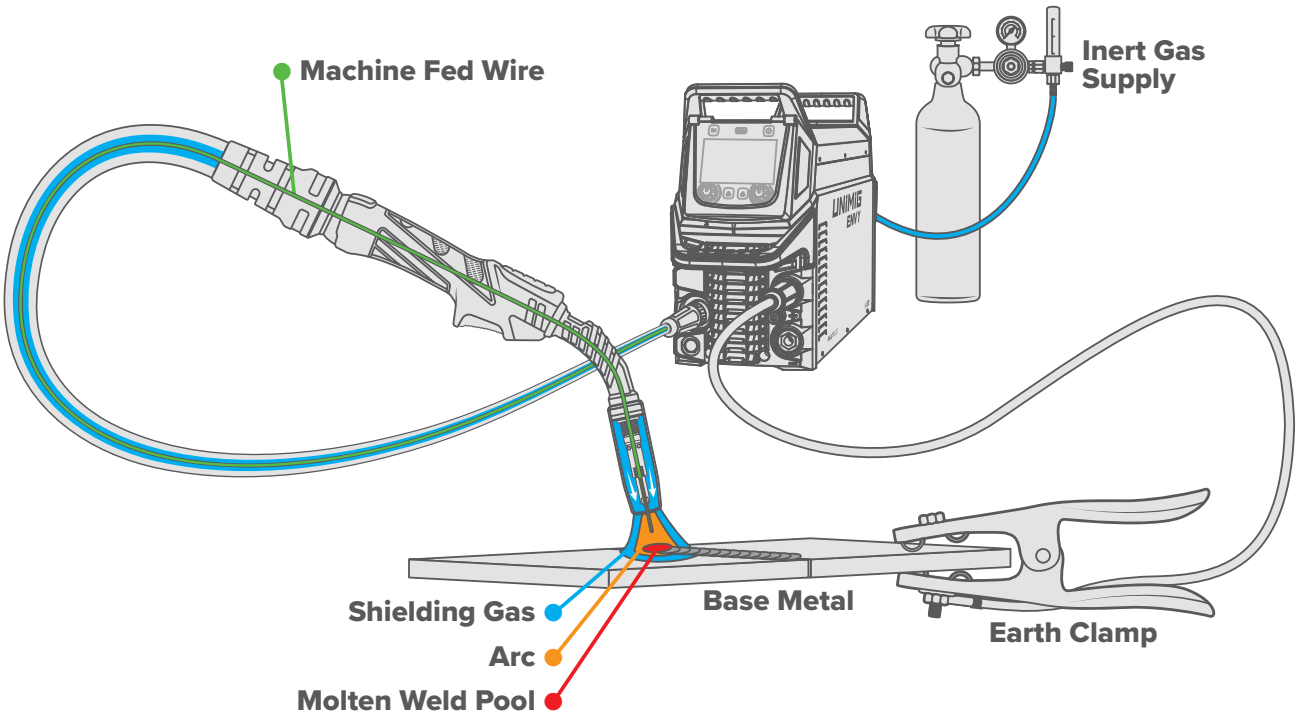

What is Flux-Cored Welding?

Flux-cored welding is an arc welding process where a tubular (hollow) wire electrode is continuously fed through a welding gun into a weld pool. An arc is formed between the wire electrode and base metal, melting the base material while consumable filler wire is deposited, creating the weld.

Flux-cored welding doesn't require a shielding gas. Instead, as the wire melts and deposits metal, the flux compound in the wire dissolves and releases vapours (gases). These gases rise to the surface of the weld pool, where they solidify and create a protective slag layer over the weld.

Flux-cored welding is also known as Flux-Cored Arc Welding (FCAW) and gasless MIG.

How MIG Welding Works

A constant voltage, direct current power source is used with MIG welding. It feeds wire through the driver rollers, into the torch liner and out of the contact tip and nozzle of the MIG torch. When the wire passes through the copper contact tip, it becomes electrically charged with the welding current. The wire comes out of the torch and touches the base metal, creating an arc between the two.

MIG welding is considered a semi-automatic process because the wire feeding is automatic, but the torch movement is done by hand.

There are two main parameters when MIG welding: voltage and wire feed speed.

The voltage determines how much heat is in the weld. Turning it up or down will adjust how much welding current is added to the weld.

The wire feed speed determines how much wire per minute is added to the weld. The more wire that's added, the cooler the weld will be, and vice versa.

Your voltage and wire feed speed generally work in harmony together and will determine the mode of metal transfer.

Modes of Metal Transfer

There are four main ways filler metal can be transferred from the torch into the base:

- Short Circuit
- Globular
- Spray
- Pulse Spray

Short Circuit Transfer

Metal is transferred by the short circuit mode when the wire is fed into and connects with the puddle, shorting the circuit. It is also known as dip transfer.

Short circuit is the most common mode of metal transfer, as it's done with low volts and it can be used in every position – flat, horizontal, vertical, or overhead. It can be run on straight CO2 or an argon/CO2 gas mixture.

The wire heats up and begins to form a molten bead, which then separates from the end of the wire and forms a droplet that is transferred into the weld pool. This shorting occurs roughly 20 to 200 times a second which makes the arc appear constant to the human eye.

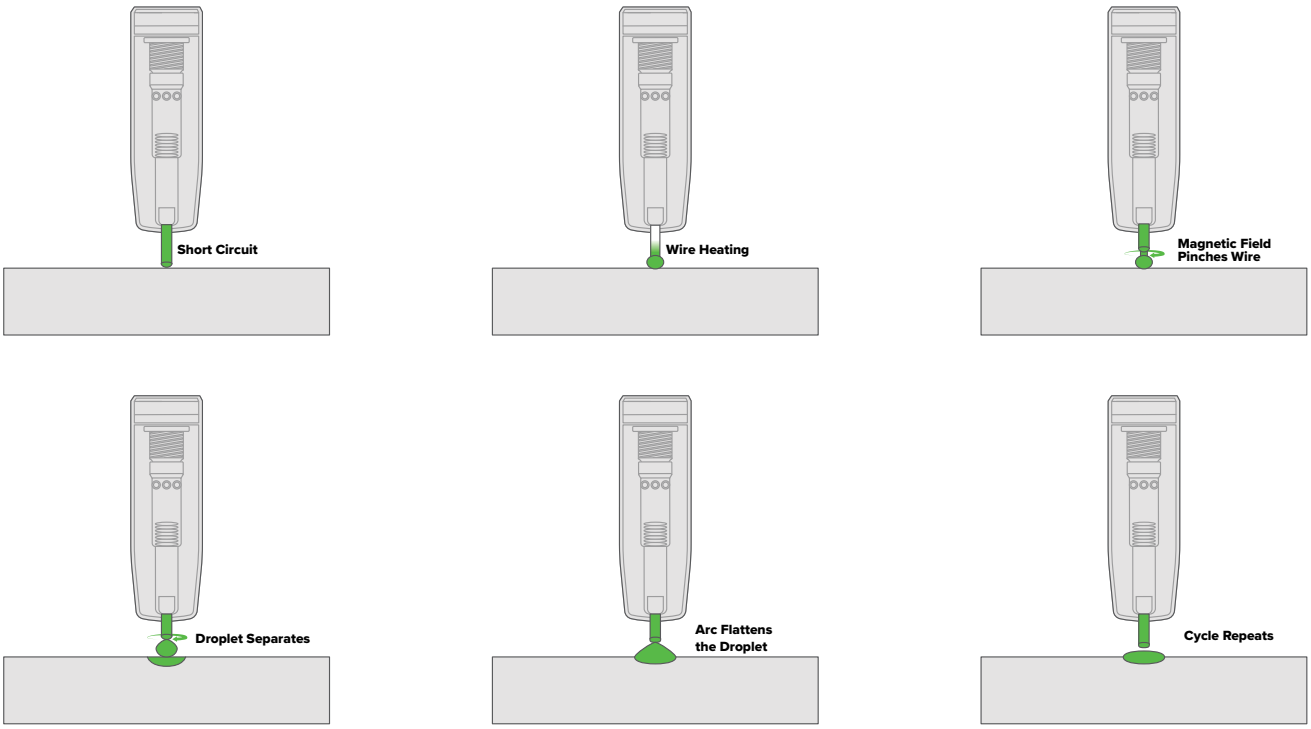

Globular Transfer

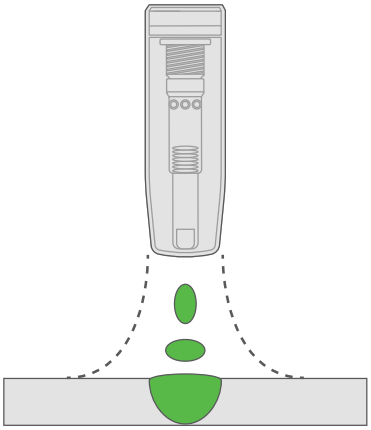

Metal is transferred by the globular mode when the wire creates globs of molten metal on the tip that fall into the puddle to make the weld. It looks like a small ball is constantly forming and reforming on the end of your wire. It can be run on straight CO2 or an argon/CO2 gas mixture.

Globular is hotter in value, with more wire feed speed and voltage than short circuit, so the weld pool is more fluid. Because the pool is more fluid, it's restricted to flat and horizontal positions only. The bead appearance isn't as smooth, and the process often results in excessive spatter, but it has good penetration.

Spray Transfer

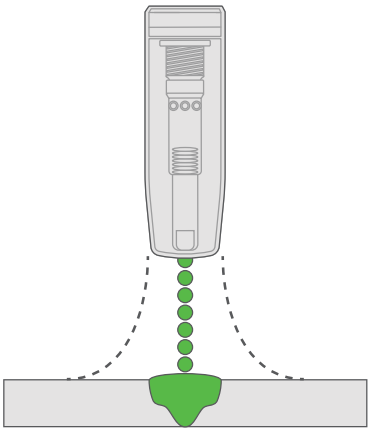

Metal is transferred by the spray mode when the amps and voltage are high enough that the wire begins to spray tiny droplets into the pool. These droplets are generally the same size as the wire diameter.

The spray method is usually limited to 6mm or greater thicknesses because of the necessary voltage and wire feed speed needed to move into the spray transfer. Unlike short circuit and globular, it needs to be run on an argon/CO2 mix of 82% or more.

It's good for heavy fabrication and thick material as it has a deep penetration profile. However, it's so hot and fluid that it's not suitable for vertical up, vertical down, or overhead welding. It's a much cleaner process, though, with almost no spatter.

To MIG weld aluminium, it's recommended to use a pulse welder to do so. If you want to use a constant voltage, you must use the spray transfer mode. It is not possible to MIG weld aluminium using short circuit or globular.

Pulse Spray Transfer

Pulse spray is similar to the standard spray method, but it 'pulses' between the set amps (the peak amps) and a low point. Having a low point means that the weld has a moment to cool each time, making the pulse spray transfer more versatile. Because the weld pool has time to (briefly) cool, it isn't as fluid, so it can be used in more than just flat positions.

Pulse spray still needs an argon/CO2 gas mix of 82%/18% and it also requires a machine with the ability to pulse MIG.

Pulse MIG Welding

Pulse welding is a form of spray transfer MIG in which the current alternates between a peak current and a base current.

It offers several advantages, including higher welding speeds and deposition rates, a lower heat input, a spatter-free arc, and a smooth weld appearance. Pulse welding is suitable for all welding positions and is particularly effective for welding aluminum and stainless steel, especially when working with thinner materials.

Pulse

Pulse is a welding process where the current alternates between the base current and the pulse current.

Double Pulse

Double pulse is a welding process that involves two distinct pulse levels, with the welding power fluctuating between these levels.

MIG Welding Basics

The quality of your weld and the weld bead profile depends on several factors, including the direction of travel, the travel angle, the wire stickout, the work angle and how fast you travel along your workpiece.

Torch Length

When MIG welding mild or stainless steel, a 4m or 5m torch will work without issue. When MIG welding aluminium, it is recommended to use a 3m torch, as the shorter length helps to reduce potential wire feeding issues.

If more distance is required, for mild and stainless steel (5m+), or aluminium (3m+), a push-pull gun should be used instead. The addition of the motor on the torch allows the wire to be fed longer distances without problems.

Travel Direction

The direction you'll need to travel in will be determined by the type of wire you're using. A push technique should be used when welding with a gas-shielded wire and a pull technique should be used when welding with a flux-cored (gasless) wire.

Push Technique

The push technique is where the wire is located at the leading edge of the weld pool and pushed towards the not yet welded part of the joint. This technique offers a better view of the weld joint and direction of the wire into the weld joint. It directs heat away from the weld puddle, allowing faster travel speeds and providing a flatter and wider weld profile for minimal clean-up.

Pull Technique

The pull or drag technique is where the torch and wire are pulled away from the weld bead. The arc and heat are concentrated on the weld pool. The base metal receives more heat, deeper melting, more penetration, and the weld profile is higher with more build-up.

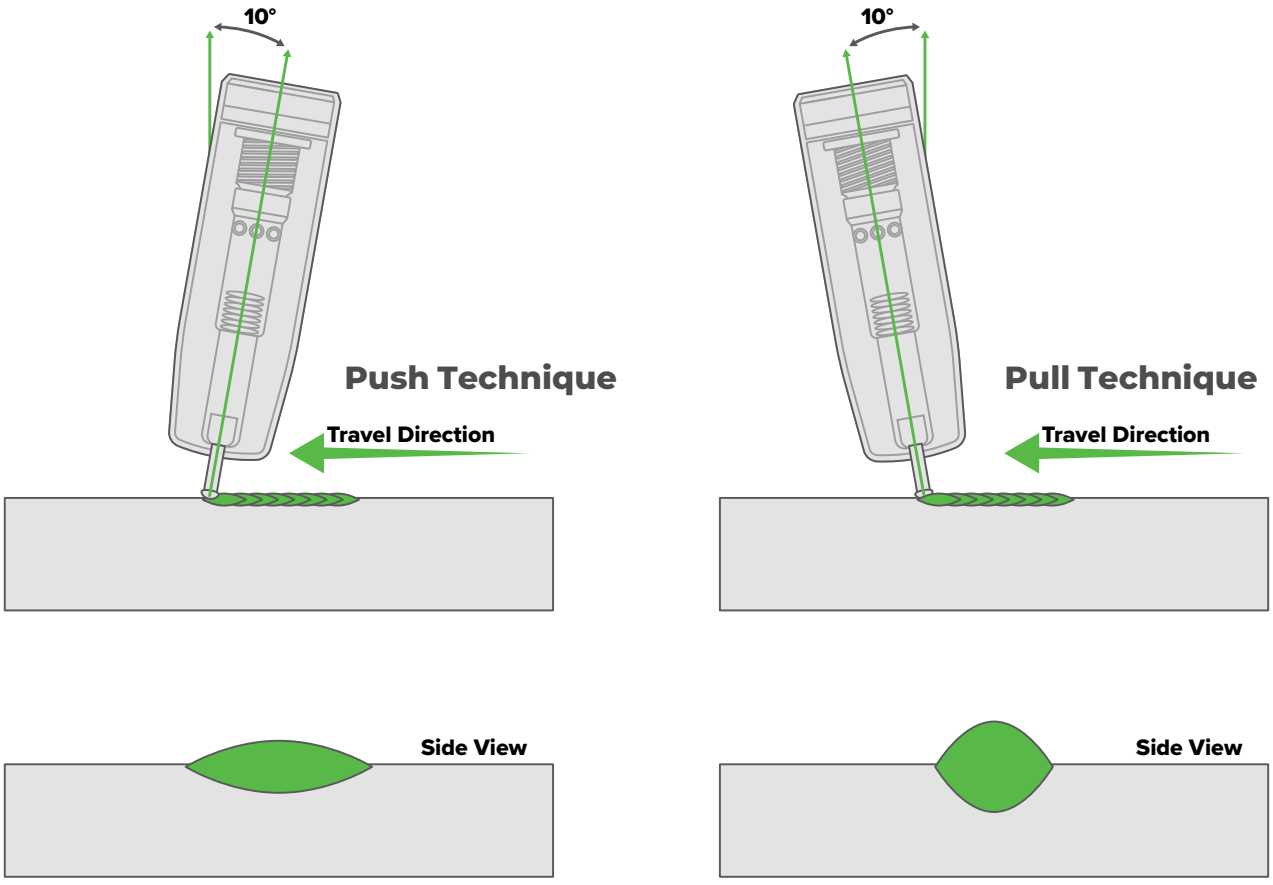

Travel Angle & Distance

The travel angle is the right to left andlge of the torch, relative to the direction of welding. Whether you're pushing or pulling, you want to keep your torch at a 10° to 15° angle. If your angle becomes too deep or parallel with the metal you're welding, you increase the spatter amount, decrease penetration, and create more mess that you'll have to clean up later.

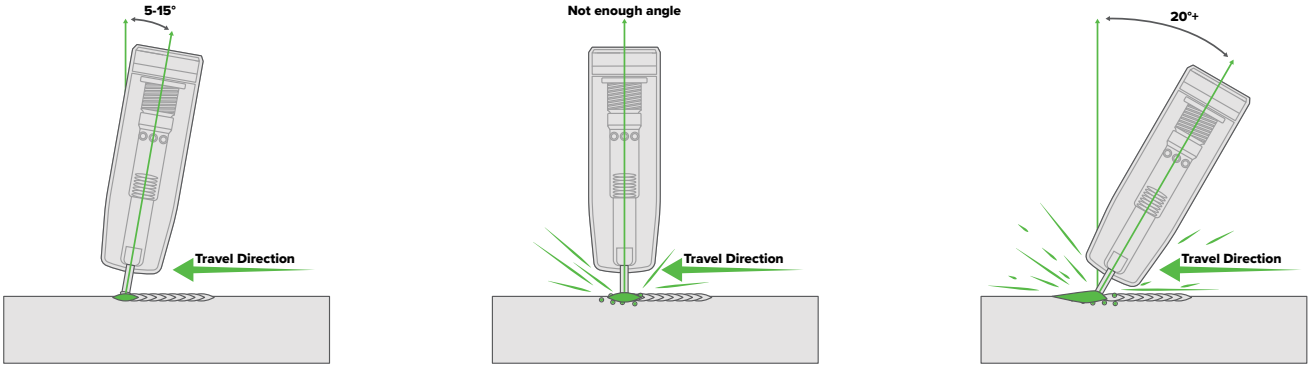

The other important thing to watch is the distance of your wire 'stickout'. The stickout is the length of unmelted wire protruding from the end of the contact tip. You want to maintain the 1cm of stickout throughout the joint for the best weld. If your wire is sticking out too far as it's feeding and your torch nozzle is getting further away from your workpiece, it will cause a few problems.

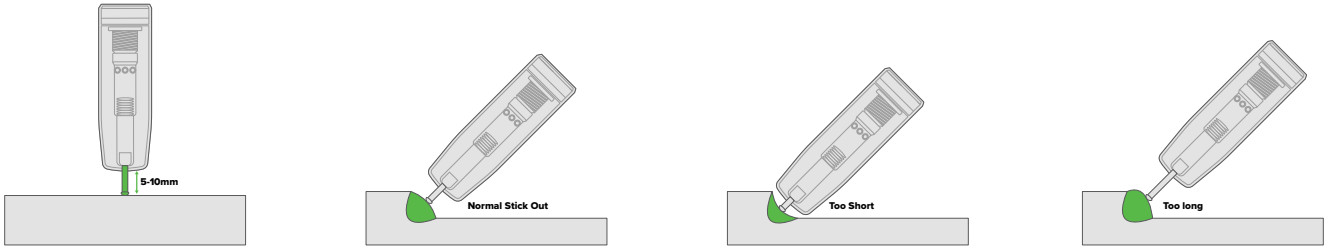

Work Angle

The work angle is the up and down of your torch in relation to the angle of the joint. There are a few different joint types, and several positions these joints can be found.

T-joint / Fillet Joint	Butt Joint	Lap Joint
90° joint angle	180° joint angle	90° joint angle
45° work angle	90° work angle	60°/70° work angle

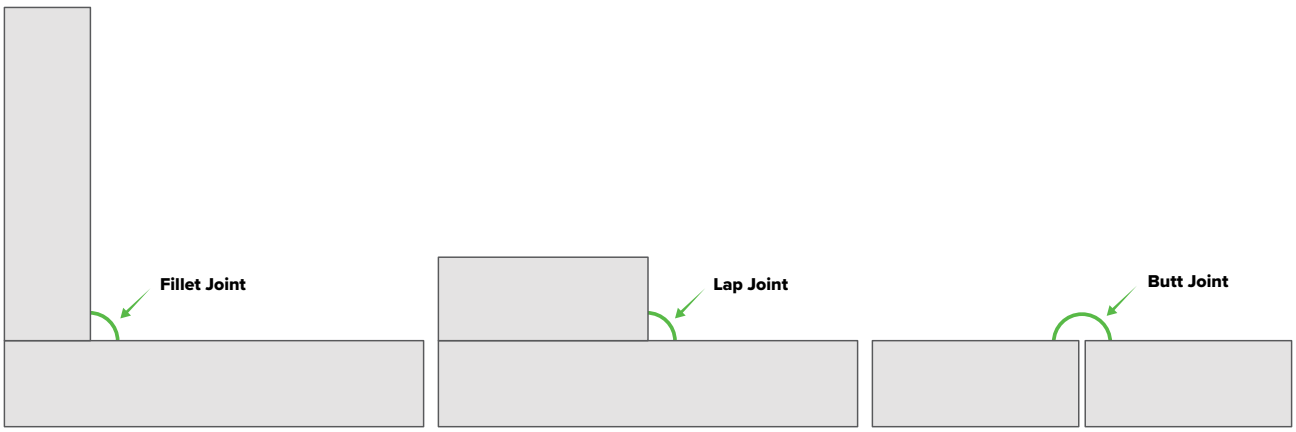

Travel Speed

Travel speed is the rate that the gun is moved along the weld joint and is usually measured in mm per minute. The travel speed needs to match the wire feed speed and will decrease as the material thickness and wire feed speed increase.

Travel Speed Too Fast

Too fast a travel speed produces too little heat, resulting in less penetration and reduced weld fusion. The weld bead solidifies very quickly, trapping gases inside the weld metal and causing porosity. Undercutting of the base metal can also occur, and an unfilled groove in the base metal is created when the travel speed is too fast to allow molten metal to flow into the weld crater created by the arc's heat.

Travel Speed Too Slow

Too slow a travel speed produces a large weld with a lack of penetration and fusion. The energy from the arc dwells on top of the weld pool rather than penetrating the base metal. This produces a wider weld bead with more deposited weld metal than is required, resulting in a weld deposit of poor quality.

Correct Travel Speed

The correct travel speed keeps the arc at the leading edge of the weld pool, allowing the base metal to melt sufficiently to create good penetration, fusion and wetting out of the toes, producing a weld deposit of good quality.

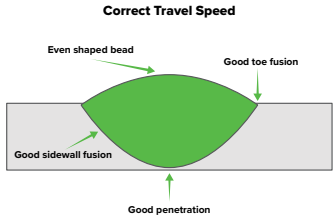

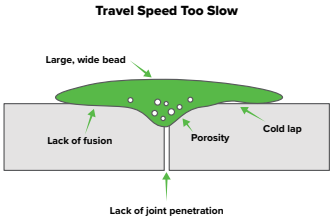

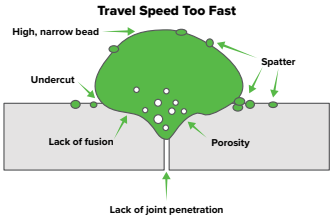

Wire Type & Size

Use the correct wire type for the base metal being welded. Use stainless steel wire for stainless steel, aluminium wires for aluminium and steel wires for steel.

Using poor quality milled wire can result in poor performance and appearance. To ensure optimal performance when welding, use standards approved wire such as UNIMIG HYPERMIG wire.

Use a smaller diameter wire for thin base metals. For thicker materials use a larger wire diameter and larger machine. Check the recommended welding capability of your machine.

Drive Rollers

The drive rollers in the machine help to guide and feed the wire from the spool and out through the torch. They're designed for different metal types, so make sure you're using the correct drive roller for your metal type.

V Groove Drive Rollers

V groove drive rollers are used for solid wires, such as mild and stainless steel. They're characterised by their 'V' shape and aren't knurled or textured. The shape of the roller is ideal for solid wires as it works to feed the wire without it slipping or deforming the wire.

F Groove Drive Rollers

F groove drive rollers, sometimes called knurled drive rollers, are specifically designed for flux-cored (gasless) wires. As their name suggests, these rollers are knurled and can look almost zig-zagged in pattern, or like teeth, in the groove.

These knurls allow the roller to properly grip the wire as it is fed into the torch without any extra tension. That way, the wire isn't distorted through excessive tension and doesn't lose its shape, which can cause feeding issues.

U Groove Drive Rollers

U groove drive rollers are used specifically for aluminium wire, which is a softer wire, so it's more prone to deforming under too much tension. These rollers are also characterised by their 'U' shape and are smooth inside. The U-shaped groove helps to maintain the wire's shape as it is fed through the torch, giving you a smooth wire feed.

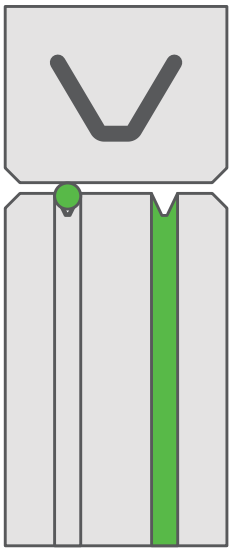

V Groove

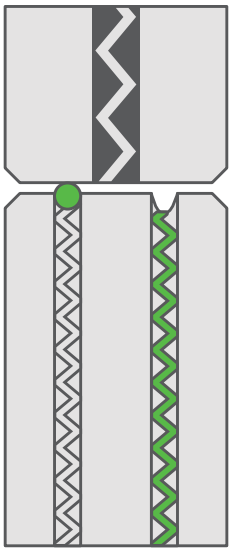

F (Knurled) Groove

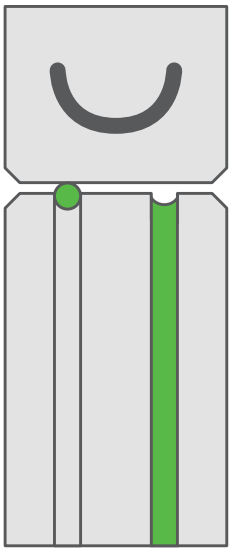

U Groove

13. TIG Welding Guide

What is TIG Welding?

Tungsten Inert Gas (TIG) welding is an arc welding process in which an arc is formed between a non-consumable tungsten electrode and the workpiece to create the weld.

Filler metal is added manually, though it isn't always necessary.

An inert shielding gas is fed through the TIG torch to protect the weld from outside contaminants.

TIG welding is also known as Gas Tungsten Arc Welding (GTAW).

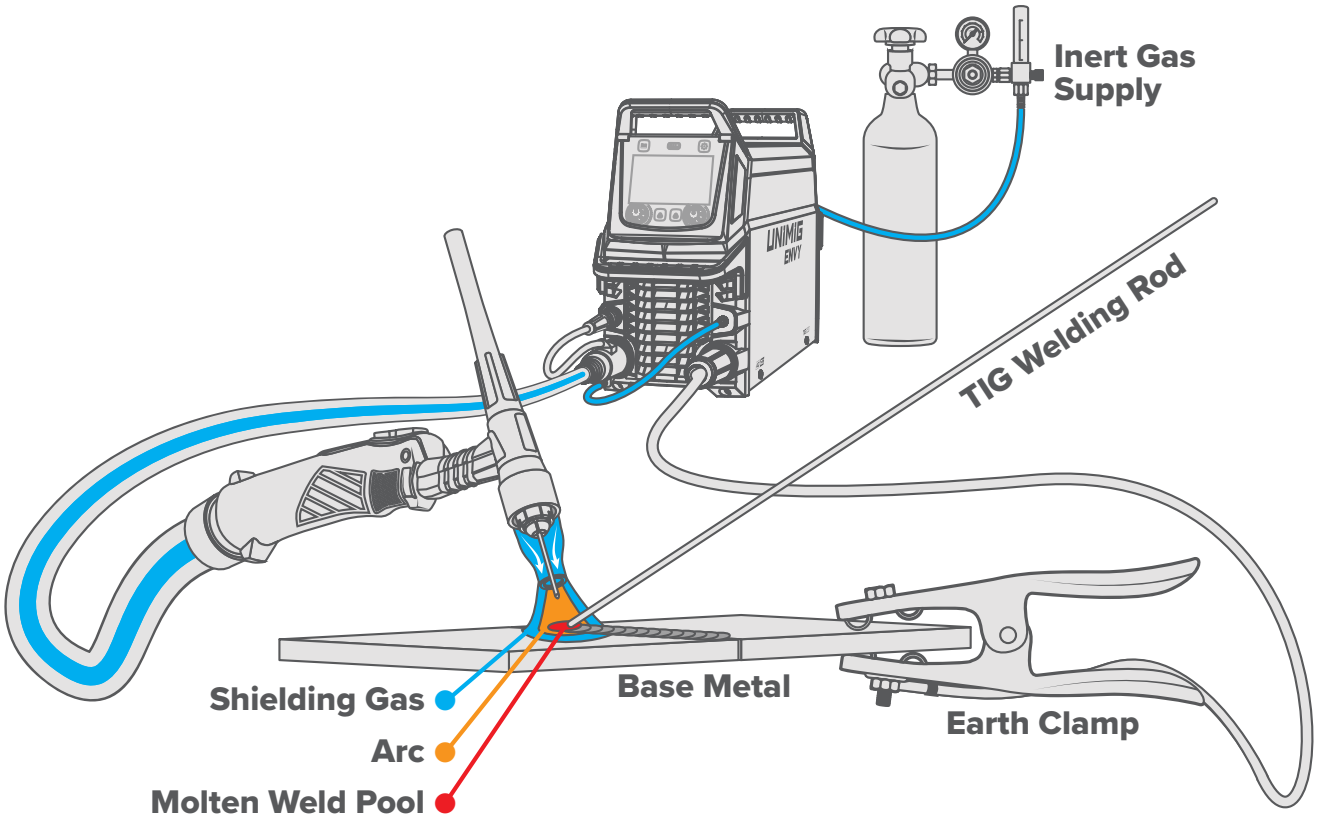

How TIG Welding Works

You can TIG weld two different ways: with alternating current (AC) or direct current (DC). Both need to be run on a constant-current power source to work. Both AC and DC TIG welding are done in negative polarity or Direct Current Electrode Negative (DCEN).

The current is negatively charged and runs from the positive to the negative. This means that 70% of the heat of the arc is concentrated in the workpiece.

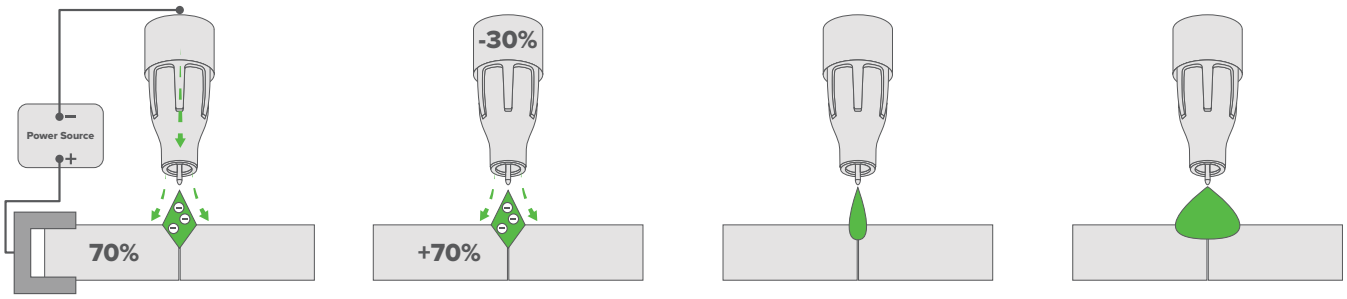

An arc is formed between the tungsten electrode and the workpiece. Tungsten has a melting point of 3,422°C, so it can withstand the heat of a welding arc. That's why it is a 'non-consumable' electrode. It doesn't melt and enter the weld pool. To add metal, an additional filler rod can be fed into the weld puddle by hand to form a proper weld.

TIG welding is the only welding process that requires the use of both hands to create the weld, so it is a completely manual process that has a steeper learning curve than MIG or MMA.

Lift Arc TIG Welding

Lift arc is a form of arc ignition which is done by touching the tungsten electrode to the workpiece and lifting it up to start the arc. When the machine detects that the tungsten has left the surface and a spark is present, it immediately (within microseconds) increases power, converting the spark to a full arc.

Lift arc ignition stops the tungsten tip from sticking to the workpiece and breaking the tungsten electrode, and is a superior option to scratch start.

There is a particular technique called "rocking the cup" used which is the easiest way to start an arc with lift arc.

Hold your torch at a 45° angle, with the gas shroud resting on the workpiece, without touching your tungsten to the metal. Then, in one motion, move the torch up to a 90° angle as the tungsten electrode touches the metal, and then lift it off the workpiece roughly 3mm to initiate the arc.

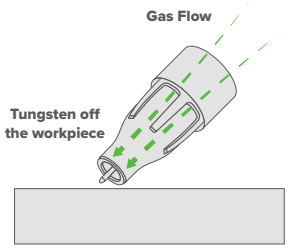

Lay the nozzle on the job without the tungsten touching the work.

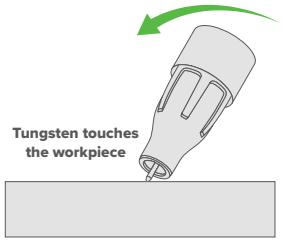

Rock the torch sideways so that the tungsten touches the work & hold momentarily.

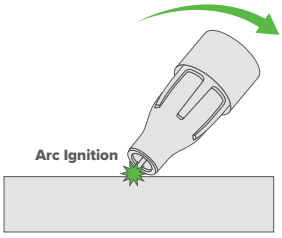

Rock the torch back in the opposite direction, the arc will ignite as the tungsten lifts off the work.

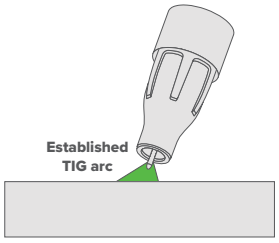

Lift the torch to maintain the arc.

High-Frequency TIG Welding

High-frequency ignition allows the arc to be started without touching the tungsten to the workpiece. By pressing the torch trigger the machine will activate the gas flow and the high-frequency spark. The spark 'ionises' the air gap, making it conductive, and allowing an arc to be created without touching the tungsten to the workpiece.

High-frequency arc starts remove any chance of tungsten contamination and are the easiest way to start an arc. A high-frequency machine also allows the addition of a foot pedal and other remotes.

AC Frequency

An alternating current (AC) flows between the negative polarity (-) and positive polarity (+) in a 'cycle'. The AC frequency determines how many cycles are completed per second. This is usually indicated as Hertz (Hz), with the standard base frequency being around 100-120Hz.

Turning your frequency up and down will change your weld profile. The higher the frequency, the more cycles per second, which creates a thinner, more prominent weld appearance as the arc becomes smaller and more focused. The lower your frequency, the flatter your weld will be, widening the weld bead.

A higher frequency is usually recommended for thinner metals, as the arc is tighter, so you can be more accurate in thin joints (like outside corners).

Slower AC Square Wave Hz

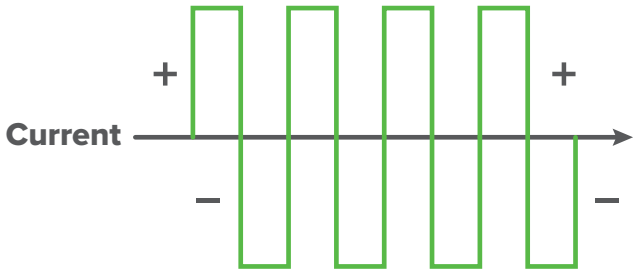

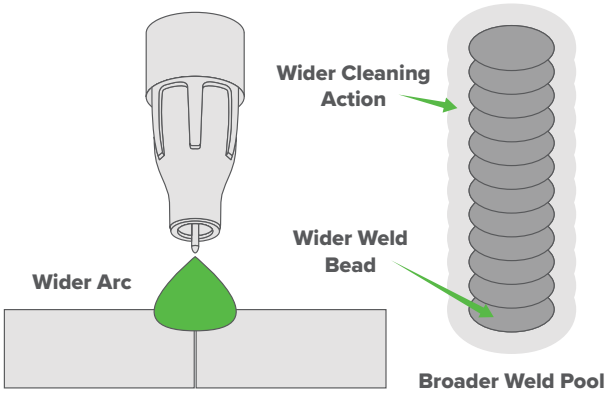

Faster AC Square Wave Hz

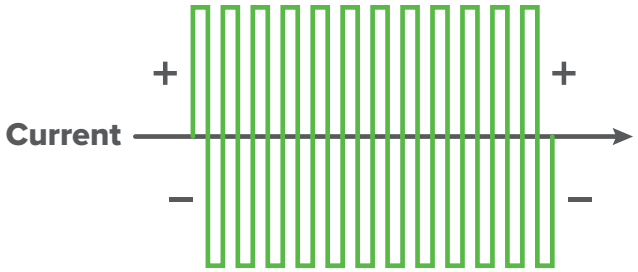

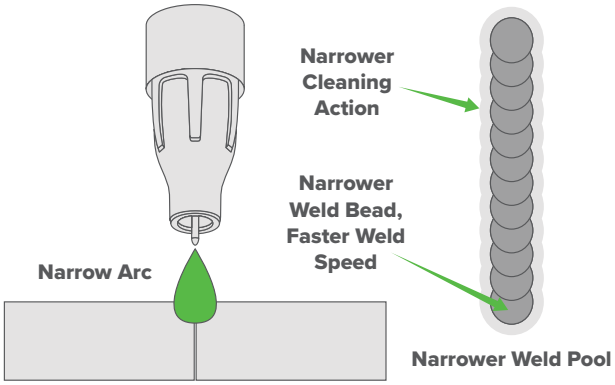

AC Balance

AC (alternating current) enables us to TIG weld non ferrous alloys like aluminium, magnesium and aluminium alloys. These materials have an insulating surface oxide layer that melts at a higher temperature than the base metal. For example, aluminium melts at around 660°C, but the oxide layer on top melts at about 2000°C.

Because it flows from postive polarity (+) to negative polarity (-), it's ideal because the AC waveform assists in breaking the surface oxide layer. The positive part of an AC cycle works to break down the oxide layer (cleaning), and the negative part is what provides the heat and penetration for the weld.

Increasing your positive percentage will increase the cleaning on your workpiece. However, the more your cleaning is increased, the less penetration you're going to have. Though it sounds balanced, a 50/50 balance won't have enough heat to form a weld pool.

Besides your lack of penetration, upping the cleaning means spending longer in the positive part of your AC cycle. The longer you spend in the positive, the hotter your tungsten gets. This heat, however, does not get transferred into the metal. Instead, it sits inside the tungsten, which will result in your tungsten balling and melting off.

A 30% positive/70% negative AC balance ratio is a generally optimal balance for most aluminium welding.

Balance adjusted for more penetration - Cooler tungsten

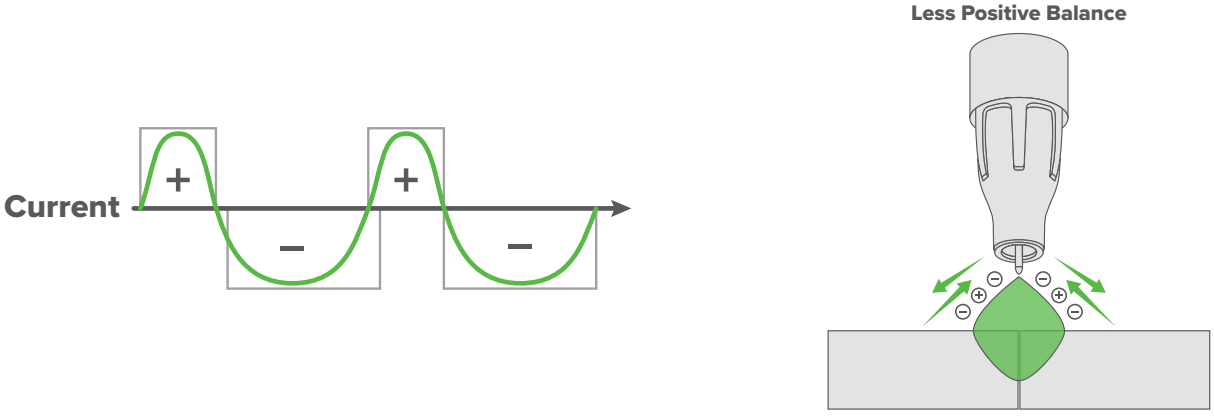

Balance adjusted for more oxide cleansing action - Hotter tungsten

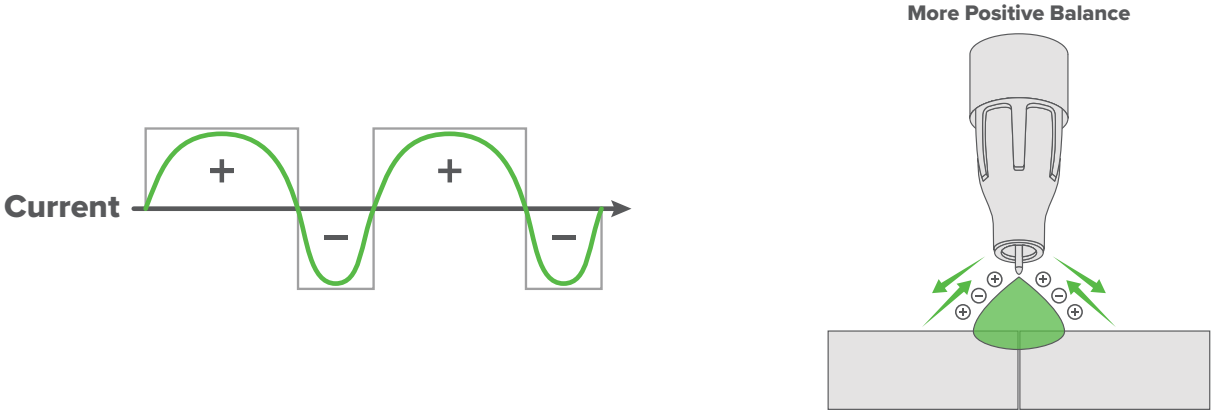

Pulse TIG

Pulse welding is a form of welding in which the amperage alternates between a high point and a low point. The high point is referred to as the peak amperage, and the low point is referred to as the base amperage. Pulse welding keeps the overall heat input of a weld low while still maintaining proper penetration.

There are four main variables when it comes to pulse welding: what the peak amperage is, what the base amperage is, how often it pulses, and how long it spends in either amperage setting.

Peak Amperage

The peak amperage is the main welding current set to melt the material being welded and works much the same as setting the maximum amperage values for regular TIG.

Base Amperage

The base amperage is the set level of background current which cools the weld puddle and effects the overall heat input. As a rule, you want enough background current to reduce the weld pool to about half its normal size while still keeping the weld pool fluid, or around 20%-30% of the peak amperage.

Pulse Frequency

The pulse frequency is the number of pulses per second. 1PPS equals one pulse per second, and 50PPS is 50 pulses per second.

If you're welding thin material, then a fast pulse is better, and it will produce a high profile bead. If you're welding thick material, then a slow pulse is better, and it will produce a low profile bead.

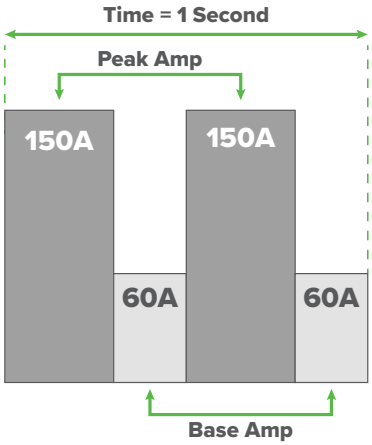

Pulse Width

The pulse percentage is the amount of time spent in the peak and base amperage for each pulse. If you set the percentage to 50%, that means 50% of the pulse cycle will be the peak amperage, and 50% of the pulse will be the base amperage.

You can adjust this either way, where 90% is almost entirely peak amperage and 20% is almost no peak amperage. The more time spent on the peak amperage part of the pulse, the more penetration you're going to get and vice versa.

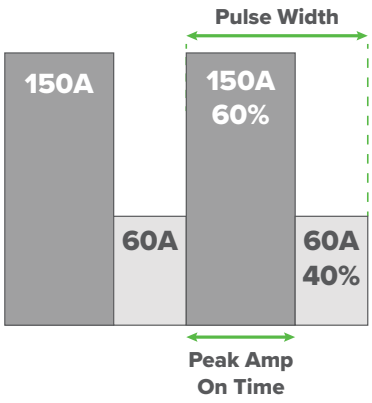

Filler Technique

When TIG welding, you'll almost always need to add filler for good reinforcement and a strong weld. Start the arc and hold the torch in place until a weld pool of the desired size has formed. Once the weld pool is established, tilt the torch at about a 75° angle and move along the joint.

The filler rod is usually held at about a 15° angle and fed into the leading edge of the molten pool. The arc will melt the filler rod into the weld pool as the torch is moved forward. A dabbing technique can be used to control the amount of filler rod that's added. A good rule of thumb is to add the same amount on each dab as the rod's width.

The rod is fed into the molten pool and retracted in a repeating sequence as the torch is moved slowly and evenly forward. It is essential during the welding to keep the molten end of the filler wire inside the gas shield as this protects the end of the wire from being oxidised and contaminating the weld pool.

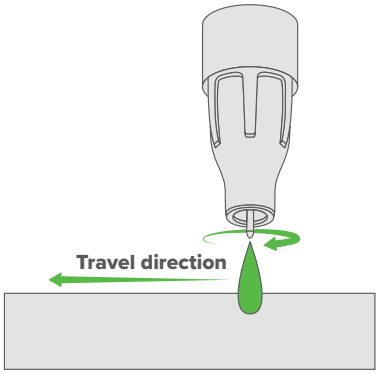

1. Form a weld pool.

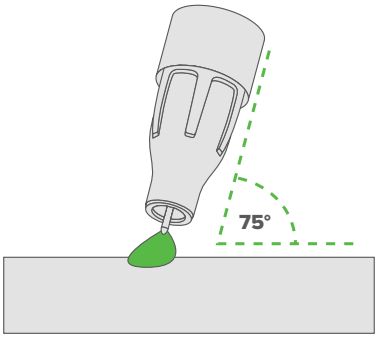

2. Angle torch.

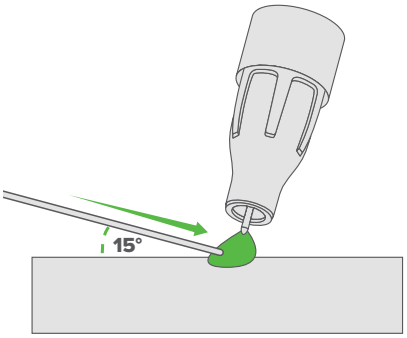

3. Add TIG filler wire.

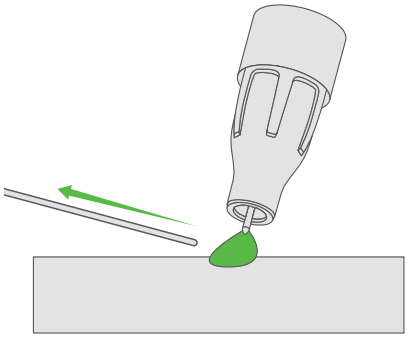

4. Remove TIG filler wire.

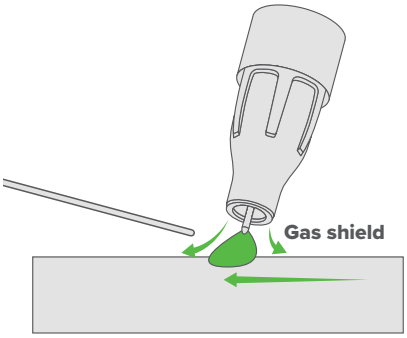

5. Move torch forward to the front of the weld pool.

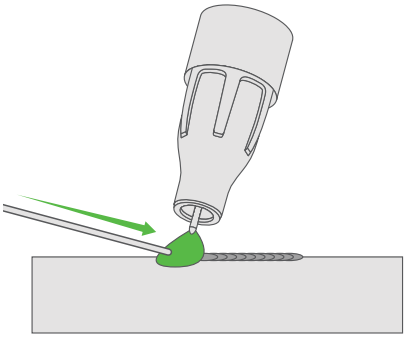

6. Repeat the process.

Fusion Technique

While filler material is required a majority of the time, there are some instances when TIG welding where it isn't needed. This is known as fusion, or autogenous, welding. The edges of the metal pieces are melted together using only the heat and arc force generated by the TIG arc.

Fusion welding is done the exact same way as TIG welding with filler, minus the filler rod. Start the arc and hold the torch in place until a weld pool of the desired size has formed. Once the weld pool is established, tilt the torch at about a 75° angle and move slowly and evenly along the joint, fusing the materials together.

Fusion welding is primarily used when combining thin materials on edge, corner, and butt joints.

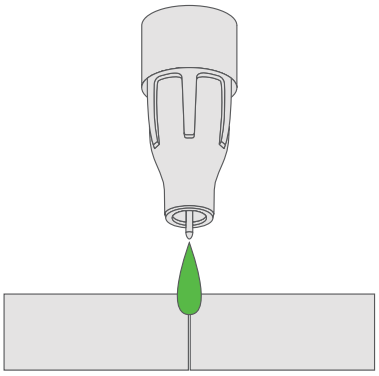

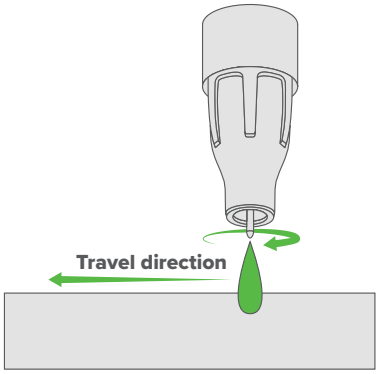

1. Form a weld pool.

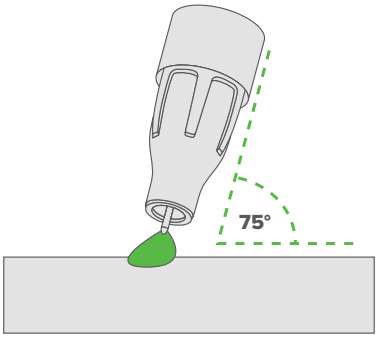

2. Angle torch.

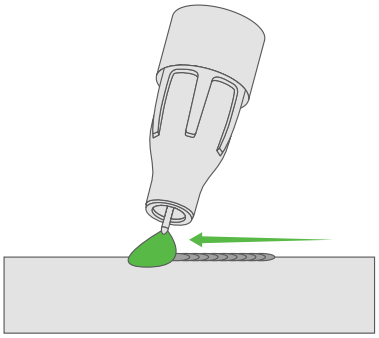

3. Move the torch slowly and evenly forward.

Tungsten Selection

	LANTHANATED (GOLD)	ZIRCONIATED (WHITE)	THORIATED (RED)	RARE EARTH (PURPLE)	CERIATED (GREY)
AC CURRENT	✓	✓		✓	✓
DC CURRENT	✓		✓	✓	✓
ALUMINIUM	✓	✓		✓	✓
MILD STEEL	✓		✓	✓	✓
STAINLESS STEEL	✓		✓	✓	✓
TITANIUM / COPPER ALLOYS	✓		✓	✓	✓
ARC IGNITION	●●●●●	●●●●●	●●●●●	●●●●○	●●●●○
TUNGSTEN LIFE	●●●●○	●●●○○	●●●●●	●●●●○	●●●●○
ARC STABILITY	●●●●○	●●●●●	●●●●●	●●●●○	●●●●○
RESISTANCE TO CONTAMINATION	●●●○○	●●●●●	●●●●●	●●●●○	●●●○○
AC PERFORMANCE	●●●●○	●●●●●	N/A	●●●○○	●●●○○

This information is intended to act as a guide only, individual results may vary depending on technique, skill and material.

Tungsten Preparation

There are a few different ways to prepare your tungsten, and different shapes will give different results on different applications.

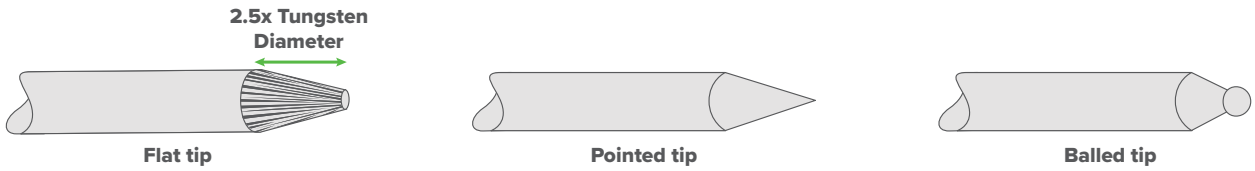

The most common tungsten shape to weld stainless and mild steel with is pointed, which produces a focused and stable arc, and works for all DC applications. To get this pointed shape, you'll need a tungsten grinder or a bench grinder (a diamond wheel is best).

If you use a bench grinder, it needs to be dedicated to tungsten preparation, as you can contaminate your tungsten with anything that's leftover on the grinder.

Press your tungsten vertically to the grinder at a 30° angle and rotate at a consistent pace until a point has formed. It's essential to grind with the tungsten's grain (lengthwise) and not against it (horizontal on the grinder) for a few reasons.

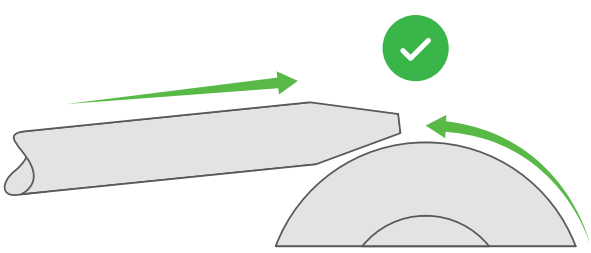

Grind longitudinal on the grinding wheel.

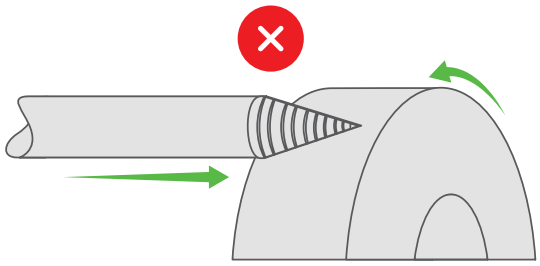

Don't grind across the grind wheel.

The main reason is that it lowers the number of ridges in the tip of the tungsten. More ridges mean that the arc has more surface to cover, increasing your chances of it wandering or the tip melting off and falling into your weld pool. Your tungsten will also stay sharper for longer if you follow the grain, so you won't need to re-grind it as often.

A truncated/flat tip follows the same preparation as a pointed tip but with the added step of grinding the end, so you get a flat top. This shape works well for both AC and DC applications.

AC Tungsten Preparation

A balled tip is usually recommended if you're welding aluminium.

1. First, prep your tungsten in the same way as you would a pointed tungsten, with a roughly 30° angle on the tungsten ending in a pointed tip.
2. Turn on the '**Cap Shaping**' setting on your machine found in the advanced parameters menu in HF TIG or Smart TIG, press the torch trigger, and the tungsten will automatically form a small ball on the tip.

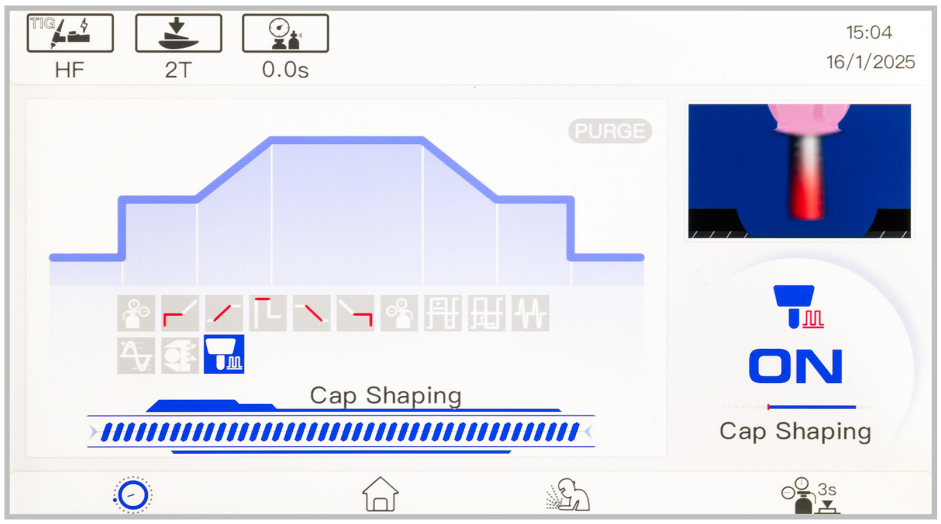



Balled tip

The other option is to set your machine to DC electrode positive (DCEP), hold the torch 90° on a piece of copper and start the arc to form a ball. This tungsten preparation method happens after you have set up your gun and machine, though, not before.

Gas Coverage Check

To ensure you have adequate gas coverage, first form a weld pool on a test piece of metal, then release the trigger and allow for 8-10 seconds of post-flow. If the gas coverage is sufficient, the weld pool will appear shiny and clear. Conversely, if the gas coverage is poor, the weld pool will look dark and sooty.

To address gas coverage issues, make sure the post-flow timing is accurate and adjust the flow rate according to the type of gas and the thickness of the material *(See "Recommended Gas Flow Rates" on page 60)*.

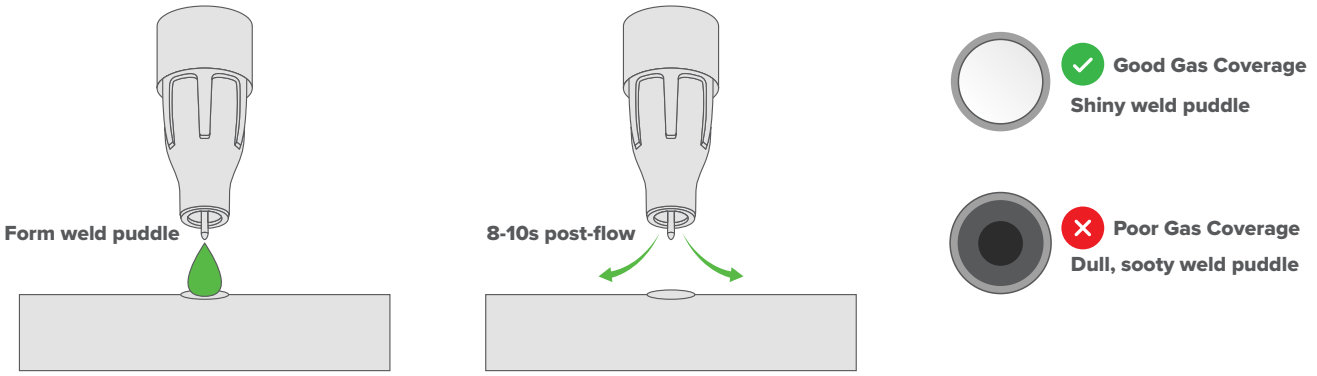

14. MMA Welding Guide

What is MMA Welding?

Manual Metal Arc (MMA) welding is an arc welding process in which an arc is formed between a flux-covered electrode and the base metal. The arc melts the electrode into the workpiece, forming the weld.

MMA is also referred to as Shielded Metal Arc Welding (SMAW), but it's most commonly known as 'stick' welding.

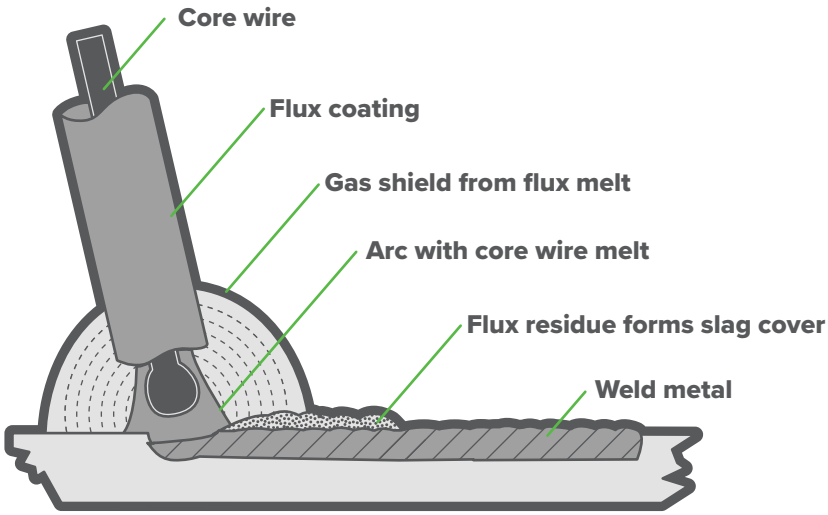

How MMA Welding Works

You can MMA weld two different ways: with alternating current (AC) or direct current (DC). Both need to be run on a constant-current power source to work. The electrode is tapped or struck against the base metal, which ignites the arc between the two. The electrodes used in MMA welding are consumable electrodes, as they melt into the base metal to form the weld.

An external gas isn't needed as the outer flux coating on each electrode works to shield the weld as it melts. The flux coating melts with the metal, releasing gases from within which bubble to the surface.

These internal gases protect the weld from outside contaminants until the puddle begins to cool. The flux coating, once melted, forms a layer of slag over the final weld, which needs to be chipped off to achieve a clean, finished weld.

Electrode Selection

There is a range of different electrodes available for MMA welding. Each is stamped with its own classification code, which details the properties of each electrode. For mild steel electrodes, there is an 'E' followed by a 4-digit code, for example, E6013.

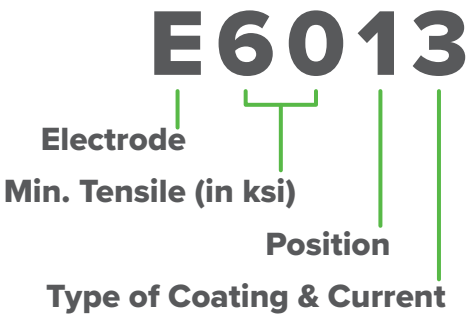

You'll need to select an electrode with a similar composition to the base metal. Generally speaking, the most common electrodes used for mild steel are E6010, E6011, E6013, E7016, E7018 and E7024. Stainless steel electrodes are marked with their metal grade, e.g., 309L.

The size of the electrode generally depends on the thickness of the section being welded, and the thicker the section, the larger the electrode required. The table gives the maximum size of electrodes that may be used for various thicknesses of section based on using a general-purpose type 6013 electrode.

Average Thickness of Material	Maximum Recommended Electrode Diameter
3-6mm	2.6mm
6-12mm	3.2mm
12-20mm	4.0mm
20mm+	5.0mm

The amperage you'll need is dependent on the electrode size and base metal thickness.

With the amperage set too low, it's difficult to strike and maintain a stable arc. The penetration is reduced and beads with a distinct rounded profile will be deposited. Too high an amperage is accompanied by overheating of the electrode, resulting in undercut, burning through of the base metal and producing excessive spatter.

Electrodes will usually come with a recommended amperage rating. The table shows current ranges generally recommended for a general-purpose type 6013 electrode.

Electrode Size	Current Range
3-6mm	60-100A
6-12mm	100-130A
12-20mm	130-165A
20mm+	165-260A

Work Angle

The work angle is the up and down of the electrode in relation to the angle of the joint. There are a few different joint types, and several positions these joints can be found.

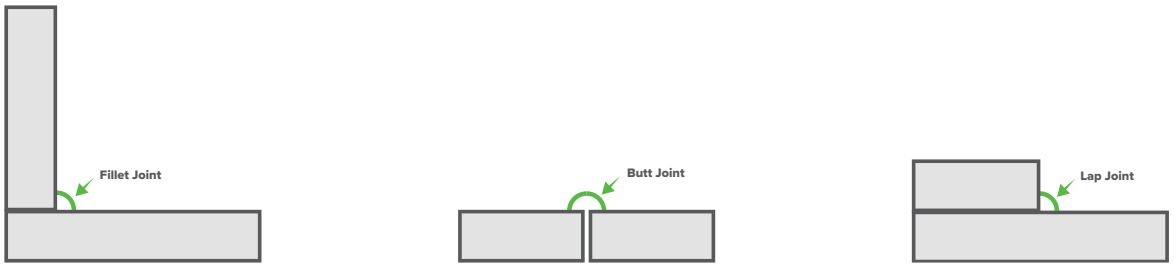

Fillet Joint (T-Joint)	Butt Joint	Lap Joint
90° joint angle	180° joint angle	90° joint angle
45° work angle	90° work angle	60-70° work angle

Travel Direction & Angle

When MMA welding, you only want to drag (pull) your weld. If you use a push angle, you risk having slag trapped in the weld pool and contaminating the weld. To drag your weld, place your electrode into the joint then tilt it slightly sideways by 10° to 15°. Your torch should hover over where you're going to be welding, rather than hovering over where you've already welded. When welding vertical up, the electrode should sit in the joint at roughly an 80° angle.

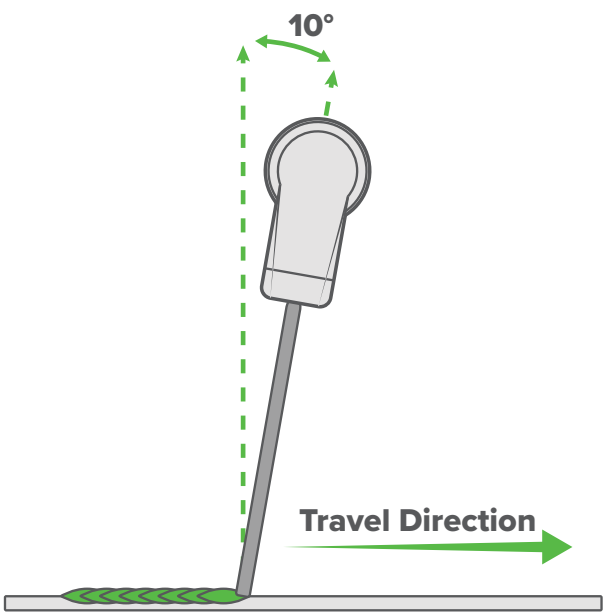

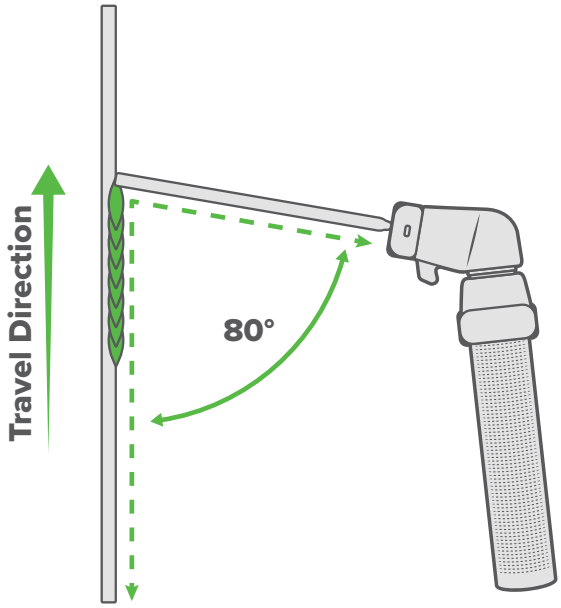

Arc Length

To strike the arc, the electrode should be gently scraped on the work until the arc is established. When welding, keep the arc length short. A good rule of thumb is that your arc length shouldn't be longer than your electrode diameter.

An arc too long reduces penetration, produces spatter and gives a rough surface finish to the weld. An excessively short arc will cause sticking of the electrode and result in poor quality welds.

Travel Speed

The electrode should be moved along in the direction of the joint being welded at a speed that will give the size of run required. At the same time, the electrode is fed downwards to keep the correct arc length at all times.

Travelling too fast will lead to poor fusion and a lack of penetration, while travelling too slow will frequently lead to arc instability, slag inclusions and burnthrough.

15. Plasma Cutting Guide

What is Plasma Cutting?

Plasma is a super-heated column of gas. It's formed when compressed air or compressed gases (like nitrogen or argon) make contact with the electrode (which is inside the torch) and ionise to create plasma.

Plasma cutting (plasma arc cutting), therefore, is a melting process that uses plasma and an outside power source to create an electric arc between the electrode and the metal being cut to melt and eject it from the cut.

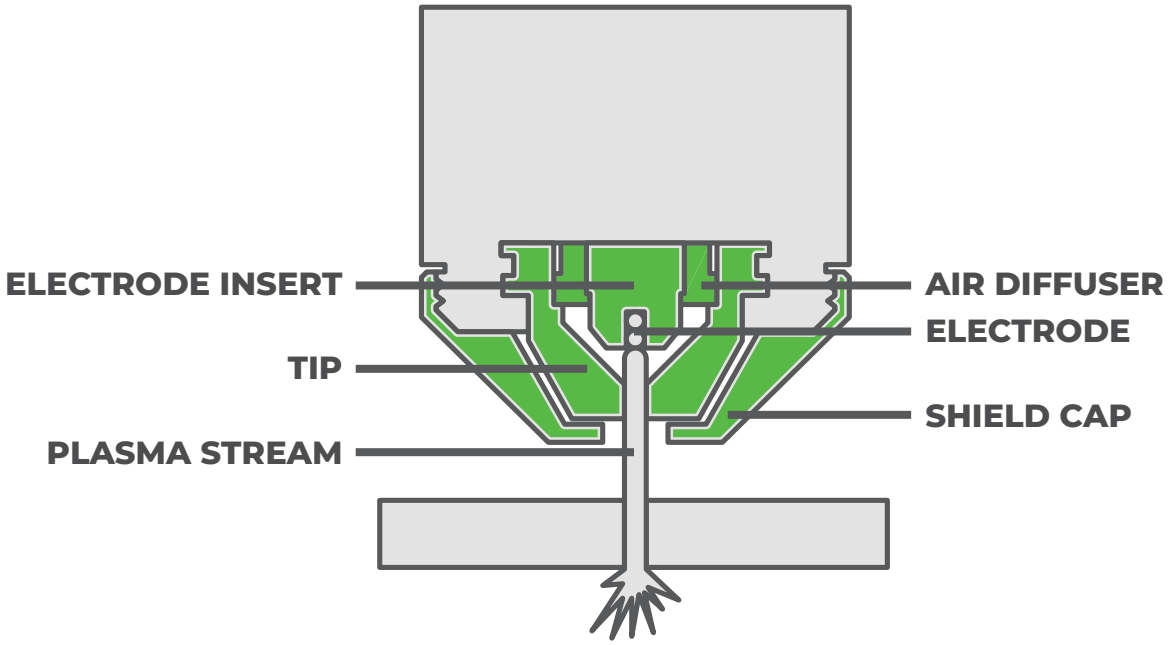

How Plasma Cutting Works

Plasma cutting requires a compressed air supply and a constant voltage, direct current power source to operate. The plasma arc is created by electrically heating compressed air to a very high temperature, which ionises its atoms and makes them conductive.

When air from the plasma torch is forced through the swirl ring, a fixed gap is established between the electrode and the tip. The air becomes ionised by the electrical arc from the electrode, transforming into plasma, which flows from the torch to the workpiece.

As the electricity from the torch travels through the plasma, it generates enough heat to melt the metal. The high-velocity plasma and compressed gas then blow the molten metal away.

What Materials Can Plasma Cut?

Plasma can cut through anything electrically conductive; steel, stainless steel and aluminium are all fair game. In comparison, oxy-cutting will only work on metals that contain iron, as it works through chemical reactions, such as oxidisation instead.

An arc is formed between the tungsten electrode and the workpiece. Tungsten has a melting point of 3,422°C, so it can withstand the heat of a welding arc. That's why it is a 'non-consumable' electrode. It doesn't melt and enter the weld pool. To add metal, an additional filler rod can be fed into the weld puddle by hand to form a proper weld.

TIG welding is the only welding process that requires the use of both hands to create the weld, so it is a completely manual process that has a steeper learning curve than MIG or MMA.

Clean Cut vs Severance Cut

You can get two types of cut with your plasma cutter: a clean cut or a severance.

Clean cut: a smooth, clean cut on the metal.
Severance: a cut all the way through, but it won't be smooth, and it'll need to be cleaned up.

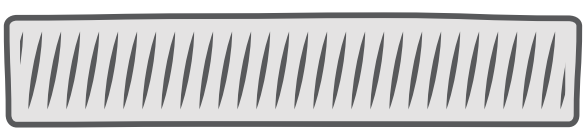

CLEAN CUT



SEVERANCE

Every plasma machine has a maximum clean cut thickness and a maximum severance. These indicate how thick the metal can be to achieve a good-quality cut and how thick the metal can be if all you need is to get through it. The severance thickness will always be more than the clean cut thickness.

The cut thicknesses will vary depending on the type of metal. Aluminium and stainless steel have a higher viscosity (which is a fluid's resistance to flow) than mild steel, so their max cutting thickness is usually less than mild steel's max thickness because of their viscosity.

Plasma Cutting Basics

Amperage

The thicker the material, the more amperage required.

On thick material, set the machine to its maximum output and vary your travel speed. On thinner material, turn down the amperage and change to a lower-amperage tip to maintain a narrow kerf. The kerf is the width of the cut material that is removed during cutting.

Make sure the torch's consumables can handle the amperage it's outputting. If the machine is set to 80A and the consumables can only handle 60A max, you'll burn through them.

Travel Speed

The travel speed will depend on the thickness of the material being cut. When travelling at the correct speed, the sparks should come out the bottom of the plate, lagging behind the torch at a slight angle (roughly 15° - 30° from vertical).

If you're cutting too fast, the sparks will spray at a very steep angle in the opposite direction than you're cutting. Some sparks might even fly out from the top. If they're flying out of the top, it means the plasma arc isn't cutting all the way through, and the sparks are bouncing off the part that is still joined together.

If they come out straight down and get stuck in grooves, you're cutting too slow. Cutting too slowly results in a wider kerf (the material lost due to the cutting process) and dross (excess metal from the cut that hardens on the bottom of the piece and needs to be cleaned off). Cutting too slow also makes the cut much harsher; it won't be as smooth as it could be.



TOO FAST

Tip Size & Condition

The tip orifice focuses the plasma stream to the workpiece, which is why it's essential to use the correct size tip for the amperage being used.

A tip suited for lower amperages has a smaller orifice which maintains a narrow plasma stream for use on thin material. Using a 25A tip at a 60A setting will blow out and distort the tip orifice and require replacement. On the other hand, using an 80A tip on the lower settings will not allow you to focus the plasma stream as well and results in a wide kerf.

The condition of the tip orifice is critical to the quality of the cut result. A worn or damaged tip orifice will produce a distorted plasma stream, resulting in poor cut quality.

Cut Direction & Angle

It is easier to pull (drag) the torch towards you than push it. The plasma stream swirls as it exits the tip, biting one side and finishing off on the other, leaving a bevelled edge and a straight edge.

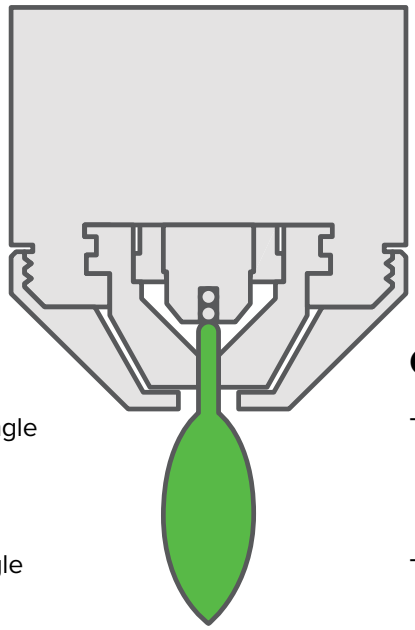

Problem	Cause	Solution
Negative cut angle	The torch is too low.	Raise the torch; or if you are using a torch height control, increase the arc voltage.
Square cut		
Positive cut angle	The torch is too high.	Lower the torch; or if you are using a torch height control, decrease the arc voltage.

- A positive cut angle occurs when more material is removed from the top of the cut than from the bottom.
- A negative cut angle occurs when more material is removed from the bottom of the cut.

The bevel-cut effect is more noticeable on thicker material and needs to be taken into consideration before starting your cut, as you want the straight side of the cut to be on the finished piece you keep.

The squarest cut angle will be on the right side in relation to the forward motion of the torch. The left side will always have some degree of bevel.

Dross

Some amount of dross is inevitable when plasma cutting, but you can minimise it by adjusting your settings to your specific application.

Excess dross appears on the top edge of both pieces of the plate when the torch height is too low. To reduce this, adjust the torch until the dross is minimised.

Low-Speed Dross

Low-speed dross forms when the cutting speed is too slow. It appears as a heavy, bubbly deposit at the bottom of the cut and can be easily removed. To reduce low-speed dross, increase the cutting speed.

High-Speed Dross

High-speed dross occurs when the cutting speed is too fast. It forms as a thin, linear bead of solid metal attached very close to the cut. This type of dross is more firmly attached to the bottom of the cut and is difficult to remove. To reduce high-speed dross, decrease the cutting speed and reduce the torch height.

Torch Height & Position

The distance and position of the plasma torch cutting tip from the workpiece affect the quality of the cut and the extent of the bevel. The easiest way to reduce the bevel is to cut at the proper speed and height for the material and amperage being cut.

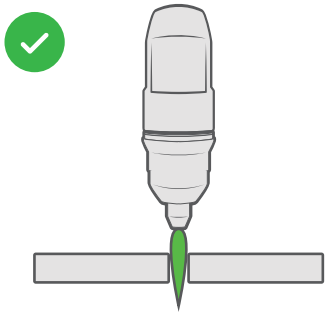

Correct torch height and square to the material. Minimum bevel & equal bevel Longest consumable life

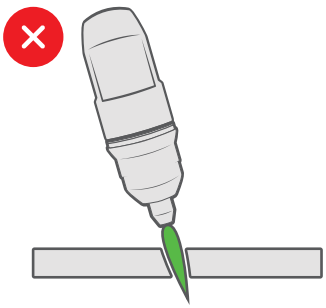

Torch angled to the material. Unequal bevel, one side may be excessively bevelled.

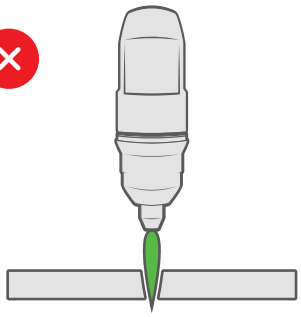

Torch height too high. Excessive bevel, plasma stream may not cut all the way through the material.

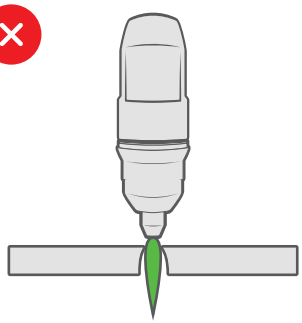

Torch height too low. Reverse bevel. The tip may contact the work and short out or damage the tip.

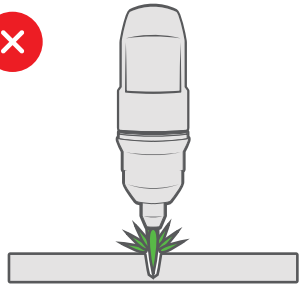

If sparks are spraying up from the workpiece, you are moving the torch too fast, or you don't have enough amps set.

Add a piece of sheet metal to push the torch up against for extra accuracy on your cuts to keep your lines straight. You can also purchase circle cutting kits and cutting buggies for circles and curved lines.

Electrode Condition

A fixed gap is established between the electrode and the inside of the cutting tip. Electrons arc across the gap, ionising and superheating the air to create the plasma stream.

The electrode contains an insert at the end made of a highly conductive material called hafnium. This insert erodes with use and develops a pit at the end of the electrode. When the pit becomes too big, the quality of the cut becomes poor, and the electrode will need to be replaced.

Cutting From the Edge

To get the most out of your consumables, it's recommended to always start your cut from the edge of the workpiece. To do this:

1. Hold the torch tip vertically (90°) to the edge of the workpiece.

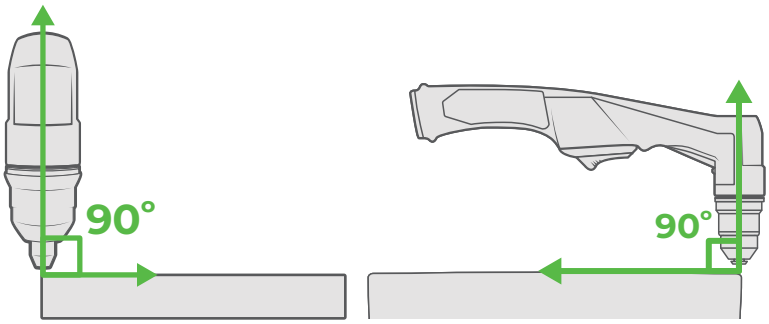

2. Start the arc and pause at the edge until the arc has cut completely through the workpiece.

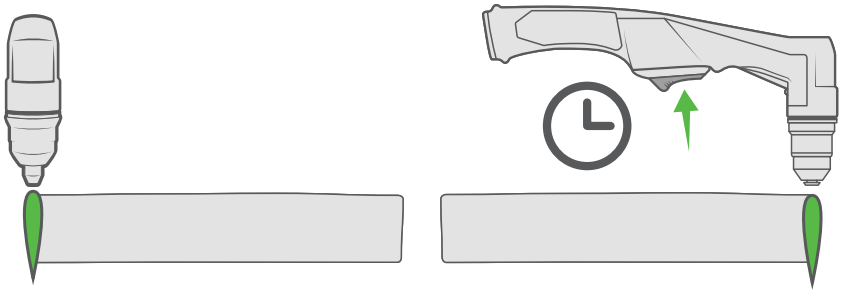

3. Drag the torch lightly across the workpiece and maintain a steady, even pace.

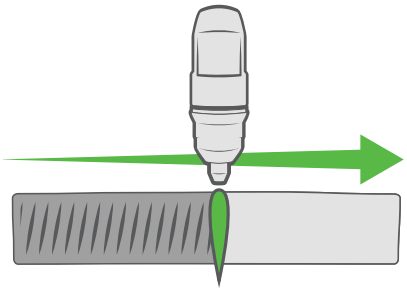

Piercing the Workpiece

It's not always possible to start a cut from the edge of the workpiece, you may need to start in the middle of the plate. To pierce the workpiece:

1. Hold the torch at approximately 30° angle to the workpiece with the torch tip roughly 1.5mm from the workpiece before starting the arc.

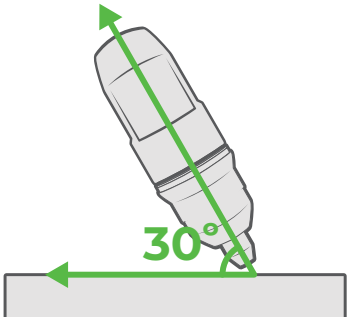

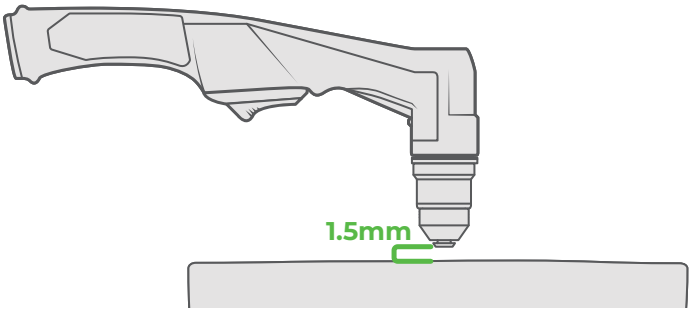

2. Start the cut while still at an angle to the workpiece and then slowly rotate the torch to a vertical (90°) position.

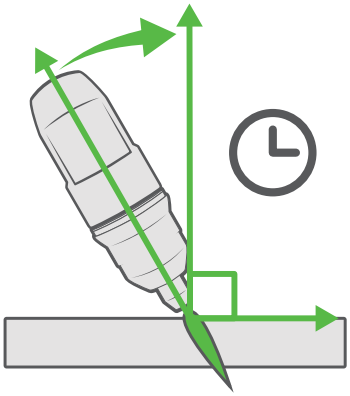

3. Hold the torch in place while continuing to press the trigger. When sparks exit below the workpiece, the arc has pierced the metal.

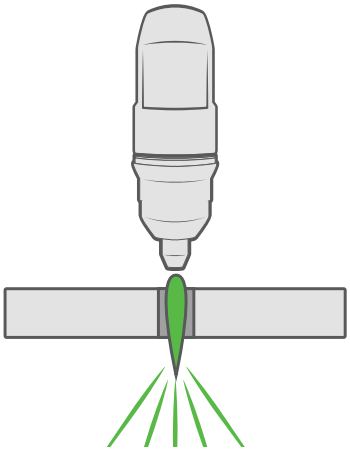

4. Once the metal has been pierced, drag the torch lightly along the workpiece and maintain a steady, even pace.

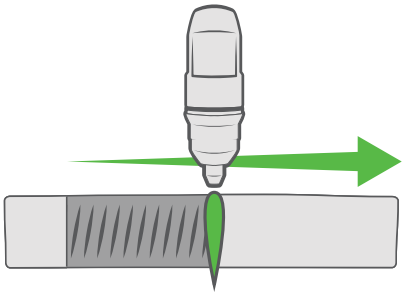

Gouging the Workpiece

Gouging is used when you want to remove metal from a piece without actually cutting through it. To do this:

1. Hold the torch at a 40° angle with the tip about 5mm - 10mm from the workpiece. Press the trigger to start the arc.

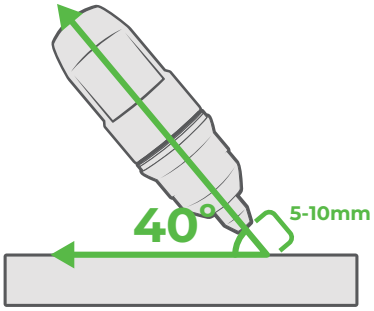

2. Pull the torch back and stretch the arc to roughly 30mm. Push the plasma arc in the direction of the gouge you want to create. Increase the standoff to create a shallower and wider gouge.

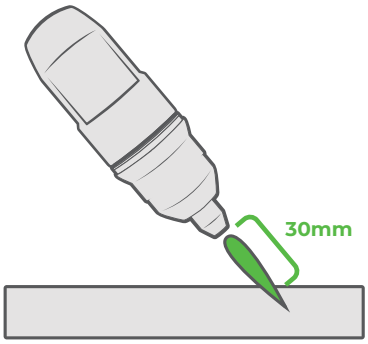

Changing the torch's angle will change the dimensions of the gouge.

Air Pressure & Volume

The volume capacity of your compressor is important. If you have a small compressor with precisely the same L/min rating as the plasma, then the compressor will run continuously when you are plasma cutting. A compressor with a L/min rating slightly higher than the plasma would be more than adequate.

If you are doing a lot of cutting, cutting thick plate (same air consumption but slower cut speeds, which means a longer cut time), then choose a compressor at 1.5x – 2x the plasma cutter's requirement.

The air pressure regulator, in general, can be found on the back of the machine above the air filter. The regulator will have a hose that runs in on one side and out on the other, with a twistable valve on top. This valve is how you change the machine's air pressure, which you can see on the pressure gauge. A good starting pressure regardless of the machine is 75psi.

The amperage and air pressure work together, so if the amperage is all the way up, you'll want to increase the air pressure as well. You don't want one overpowering the other, as it'll give you a poor-quality cut.

Air Quality & Filtration

Good air quality is essential to the quality of the cut and the torch consumable's life span.

Compressors take in air at atmospheric pressure, increase the pressure, and store it in a tank. The humidity in the air is condensed in the tank, and the airlines produce water, more so in humid environments.

Moisture that forms in the airlines tends to condense into larger drops when the air pressure decreases as it enters the plasma torch. When these droplets enter the high temperatures (as much as 11,000°C) in the torch, they immediately break down into oxygen and hydrogen, which alters the regular chemical content of the air in the torch.

These elements will then dramatically change the plasma arc, which causes the torch consumable parts to wear very quickly, and alters the shape of the tip opening, dramatically affecting the cut quality in terms of edge squareness, dross formation, and edge smoothness.

Minimising moisture in the air supply is absolutely critical to quality plasma cuts and the longevity of consumable parts. Be sure to drain the receiver (tank) on the air compressor at least daily.

Most air plasma systems have an onboard particulate filter and/or a coalescing filter with an auto drain that removes some moisture from the air supply. The onboard air filter is adequate for home workshops and light industrial users.

However, most situations will require additional filtration to prevent moisture from affecting the quality of the plasma cutter. In most cases, it is recommended to install a submicronic particulate filter designed to trap water through absorption.

This style of filter should be installed as close as possible to the plasma cutter's air intake. It has a replaceable filter cartridge that absorbs water and must be changed after it's near saturation.

16. Welding Settings Guides

16.1 TIG Mild Steel

Material Thickness (mm)	Butt Weld Amperage (A)	Lap Weld Amperage (A)	Fillet Weld Amperage (A)	1.6mm Filler / Tungsten	2.4mm Filler / Tungsten	3.2mm Filler / Tungsten	Post-Gas
0.8 mm	25-35 A	20-30 A	25-30 A	✔	✔		2s
1.0 mm	35-45 A	30-40 A	35-40 A	✔	✔		2s
1.2 mm	40-50 A	35-45 A	40-50 A	✔	✔		2s
1.6 mm	70-90 A	60-80 A	70-85 A	✔	✔	✔	3s
2.0 mm	90-110 A	80-100 A	90-105 A	✔	✔	✔	3s
2.5 mm	110-130 A	100-120 A	110-125 A	✔	✔	✔	3s
3.0 mm	130-150 A	120-140 A	130-145 A		✔	✔	4s
4.0 mm	160-180 A	150-170 A	160-175 A		✔	✔	4s
5.0 mm	190-210 A	180-200 A	190-205 A			✔	5s
6.0 mm	210-230 A	200-220 A	210-230 A			✔	6s

Material Thickness (mm)	Joint Type	Pass Type	Amperage (A)	Number of Passes	Tungsten Diameter
8mm	Butt Weld	Root Pass	275–330A	1	3.2mm
		Filler Pass	165–220A	1	3.2mm
	Fillet Weld	Filler Pass	220–275A	2	3.2mm
	Lap Weld	Filler Pass	200–255A	2	3.2mm
10mm	Butt Weld	Root Pass	310–365A	1	4.0mm
		Filler Pass	220–275A	1-2	4.0mm
	Fillet Weld	Filler Pass	275–330A	2	4.0mm
	Lap Weld	Filler Pass	240–300A	2	4.0mm
12mm	Butt Weld	Root Pass	330–440A	1	4.0mm
		Filler Pass	165–220A	1	4.0mm
	Fillet Weld	Filler Pass	330–440A	2	4.0mm
	Lap Weld	Filler Pass	310–400A	2	4.0mm

16.2 TIG Aluminium

Material Thickness (mm)	Butt Weld Amperage (A)	Lap Weld Amperage (A)	Fillet Weld Amperage (A)	1.6mm Filler / Tungsten	2.4mm Filler / Tungsten	3.2mm Filler / Tungsten	Post-Gas
0.8 mm	20-30 A	20-25 A	25-30 A	✔			2s
0.9 mm	30-35 A	25-30 A	30-35 A	✔	✔		2s
1.0 mm	35-40 A	30-35 A	35-40 A	✔	✔		2s
1.2 mm	40-50 A	35-45 A	45-50 A	✔	✔		3s
1.6 mm	60-80 A	55-70 A	65-80 A	✔	✔	✔	3s
2.0 mm	80-100 A	70-90 A	85-100 A	✔	✔	✔	3s
2.5 mm	100-110 A	90-100 A	100-110 A	✔	✔	✔	4s
3.0 mm	110-120 A	100-110 A	110-120 A	✔	✔	✔	4s
4.0 mm	130-160 A	120-150 A	130-160 A		✔	✔	5s
5.0 mm	160-190 A	150-180 A	160-190 A		✔	✔	6s
6.0 mm	230 A	230 A	230 A			✔	6s

Material Thickness (mm)	Joint Type	Pass Type	Amperage (A)	Number of Passes	Tungsten Diameter
8mm	Butt Weld	Root Pass	275–330A	1	3.2mm
		Filler Pass	165–220A	1	3.2mm
	Fillet Weld	Filler Pass	220–275A	2	3.2mm
	Lap Weld	Filler Pass	200–255A	2	3.2mm
10mm	Butt Weld	Root Pass	310–365A	1	4.0mm
		Filler Pass	220–275A	1–2	4.0mm
	Fillet Weld	Filler Pass	275–330A	2	4.0mm
	Lap Weld	Filler Pass	240–300A	2	4.0mm
12mm	Butt Weld	Root Pass	330–440A	1	4.0mm
		Filler Pass	165–220A	1	4.0mm
	Fillet Weld	Filler Pass	330–440A	2	4.0mm
	Lap Weld	Filler Pass	310–400A	2	4.0mm

16.3 TIG Stainless Steel

Material Thickness (mm)	Butt Weld Amperage (A)	Lap Weld Amperage (A)	Fillet Weld Amperage (A)	1.6mm Filler / Tungsten	2.4mm Filler / Tungsten	3.2mm Filler / Tungsten	Post-Gas
0.8 mm	20-30 A	15-25 A	20-25 A	✔			2s
1.0 mm	30-40 A	25-35 A	30-35 A	✔	✔		2s
1.2 mm	35-45 A	30-40 A	35-45 A	✔	✔		2s
1.6 mm	60-80 A	50-70 A	60-75 A	✔	✔	✔	3s
2.0 mm	80-100 A	70-90 A	80-95 A	✔	✔	✔	3s
2.5 mm	100-120 A	90-110 A	100-115 A	✔	✔	✔	3s
3.0 mm	120-140 A	110-130 A	120-135 A		✔	✔	4s
4.0 mm	140-160 A	130-150 A	140-155 A		✔	✔	4s
5.0 mm	160-180 A	150-170 A	160-175 A		✔	✔	5s
6.0 mm	190-210 A	180-200 A	190-210 A			✔	6s

Material Thickness (mm)	Joint Type	Pass Type	Amperage (A)	Number of Passes	Tungsten Diameter
8mm	Butt Weld	Root Pass	250–300A	1	3.2mm
		Filler Pass	150–200A	1	3.2mm
	Fillet Weld	Filler Pass	200–250A	2	3.2mm
	Lap Weld	Filler Pass	180–230A	2	3.2mm
10mm	Butt Weld	Root Pass	280–330A	1	4.0mm
		Filler Pass	200–250A	1	3.2mm
	Fillet Weld	Filler Pass	250–300A	2	4.0mm
	Lap Weld	Filler Pass	220–270A	2	4.0mm
12mm	Butt Weld	Root Pass	300-400A	1	4.0mm
		Filler Pass	150-200A	1	3.2mm
	Fillet Weld	Filler Pass	300-400A	2	4.0mm
	Lap Weld	Filler Pass	280-360A	2	4.0mm

Settings Used

AC Wave	Square
Balance	35%
AC Frequency	120Hz

This setup information is intended to act as a guide only. Individual results may vary depending on technique, skill and material.

17. Gas Selection

17.1 MIG

Gas	Material Thickness (mm)													Thickness Range per MIG Wire (mm)					
	1	2	3	4	5	6	7	8	9	10	11	12	13+	0.6	0.8	0.9	1.0	1.2	1.6
Mild Steel																			
Ar + 5%-10% C02	■	■	■	■	■	■	■	■						Up to 4mm	Up to 6mm	Up to 8mm			
Ar + 15-25% C02		■	■	■	■	■	■	■	■	■	■	■	■	2-4mm	2-8mm	2-12mm		4-13+	
Ar + 25%-30% He + C02										■	■	■	■			10mm+		10mm+	
C02 100%				■	■	■	■	■	■	■	■	■	■		4-8mm	4-12mm		4-13+	
Stainless Steel																			
Ar + 2-5% C02	■	■	■	■	■	■	■	■							up to 6	upto 8			
Ar + 20-40% He			■	■	■	■	■	■	■	■	■	■	■		3-8mm	3mm+			
Aluminium																			
Ar 100%	■	■	■	■	■	■	■	■	■	■	■	■	■				1-6mm	2-10mm	6mm+
Ar + 10-30% He		■	■	■	■	■	■	■	■	■	■	■	■				1-6mm	2-10mm	6mm+
Ar + 50-75% He						■	■	■	■	■	■	■	■					6-10mm	6mm+
FCAW																			
Ar + 15-25% C02		■	■	■	■	■	■	■	■	■	■	■	■					2mm+	3mm+
C02 100%				■	■	■	■	■	■	■	■	■	■					3mm+	4mm+

17.2 TIG

Gas	Material Thickness (mm)														Thickness Range per Rod Diameter (mm)			
	1	2	3	4	5	6	7	8	9	10	11	12	13	14	15+	1.6	2.4	3.2	4.0
Ar 100%	■	■	■	■	■	■	■	■	■	■	■	■				Up to 5mm	2-12mm	4-12mm	5-12mm
Ar + 10-30% He		■	■	■	■	■	■	■	■	■	■	■	■	■		2-6mm	3-13mm	5-14mm	6mm+
Ar + 50-75% He			■	■	■	■	■	■	■	■	■	■	■	■	■	3-7mm	4-14mm	5-15mm	7mm+

This setup information is intended to act as a guide only. Individual results may vary depending on technique, skill and material.

18. Welding Processes & Features Glossary

A

AC Balance - The ratio of positive to negative current in the AC cycle. Lower values increase penetration, while higher values increase cleaning action on the metal's surface.

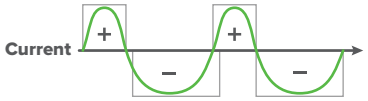

AC Frequency - The number of AC cycles in one second. A higher frequency narrows the arc for precision, while a lower frequency widens it for thicker materials.

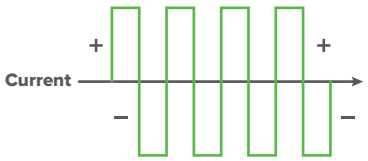

AC Waveform - The AC waveform determines the way the current flows between the positive and negative parts of the cycle. They affect the shape of the weld bead, penetration of the weld and the noise of the welding process. There are three waveforms to choose from: Square, Sine, Triangle, or a combination of two.

DC+	WAVEFORM	DC-
SINE		SINE
RECTANGULAR		RECTANGULAR
TRIANGULAR		TRIANGULAR
RECTANGULAR		SINE
SINE		RECTANGULAR
SINE		TRIANGULAR
TRIANGULAR		SINE
RECTANGULAR		TRIANGULAR
TRIANGULAR		RECTANGULAR

Amplitude Control - The independent amplitude control customises the amperage in both the EP and EN parts of the AC cycle, allowing complete control over the level of heat in the tungsten and workpiece. EN controls penetration, while EP enhances arc cleaning.

Arc Force - The level of current boost when the machine senses voltage drops, improving arc stability and preventing electrode sticking. A higher value gives a more forceful arc, especially useful in vertical or overhead positions.

Arc Length - The distance between the point where the arc touches the wire electrode and the workpiece. Adjusting the arc length changes the voltage.

B

Base Amp - The lower current level in the pulse cycle.

Base Amp P (percentage) - The current level of the second pulse in the double pulse cycle, set as a percentage of the Peak Amp.

Base Arc Length - The distance between the point where the arc touches the wire electrode and the workpiece during the second pulse of the double pulse weld cycle.

Base Time - The duration spent in the base pulse during a cycle. Longer times increase the time at base power, while shorter times create quicker transitions between pulses.

Burnback - Burnback determines how long the wire will stay charged after feeding stops. It ensures the wire end is clean for the next start and reduces the risk of wire sticking to the workpiece.

C

Cap Shaping - Automatically balls the tungsten end, eliminating manual preparation for enhanced efficiency.

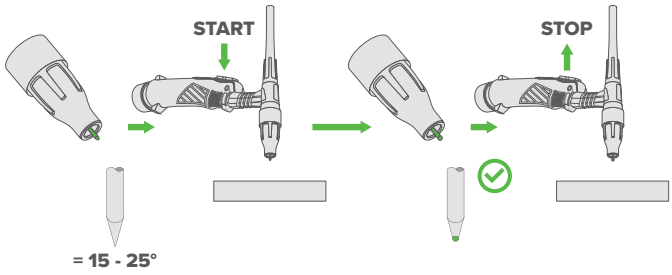

Crater Fill - Controls the decrease of the welding current as the weld ends. This feature works to fill in the end of a weld at a lower power, preventing crater formation.

Crater Fill Time - The duration of the Crater Fill current before the weld terminates.

D

Diameter - Specify the diameter of your tungsten electrode.

Double Pulse - Double pulse is a welding process that involves two distinct pulse levels, with the welding power fluctuating between these levels.

Down Slope - The time the welding current takes to decrease from the main welding current to the End Amp.

E

End Amp - The final welding current value before the arc stops. A higher End Amp keeps more heat and ensures a smooth finish, while a lower End Amp reduces heat, minimising the chance of the weld warping or distorting.

End Current Slope - Sets the time it takes to transition from the main welding current to the set Crater Fill current.

G

Gouging - Remove material from a workpiece to create grooves, prepare weld joints, or remove welds or defects.

H

HF TIG - High-frequency TIG is a non-contact method for arc initiation. Ensures a cleaner start by preventing tungsten contamination and reducing the risk of weld defects.

Hot Start - Hot Start boosts the initial welding current for a short duration to ensure a reliable arc start.

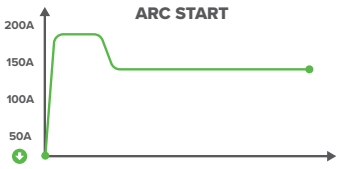

Hot Start Time - The time that the Hot Start current runs for.

Hot Start Slope - The time it takes to reach the maximum Hot Start current.

I

Inductance - The inductance controls the arc's smoothness and spatter. A higher inductance gives a softer arc with less spatter. A lower inductance makes the arc more focused and offers better penetration.

L

Lift TIG - Lift Arc TIG is an arc ignition mode that initiates the arc by making brief contact between the tungsten and the workpiece. Once lifted, the arc continues without touching.

M

Mixed AC/DC - Combines the efficiency of AC TIG and the penetration of DC- TIG, designed specifically for aluminium. It achieves high welding speeds and quickly forms a weld puddle on cold workpieces, making it ideal for heavier aluminium gauges.

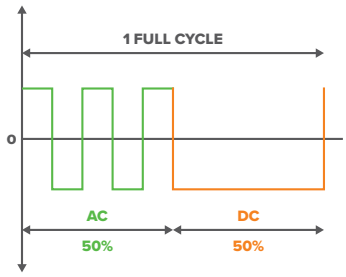

MMA - Manual Metal Arc (MMA) welding is an arc welding process in which an arc is formed between a flux-covered electrode and the base metal. The flux covering acts as a protective layer for the weld.

Min Amp - Sets the minimum amperage available on the machine when in a Remote Mode.

N

Normal Cutting - The plasma arc will cut through solid metal plate and will extinguish when it stops detecting metal.

P

Peak Amp - The maximum current level during the weld. This also sets the peak in pulse cycle.

Peak Time - The duration spent in the peak pulse during a cycle. Longer times increase the time at peak power, while shorter times create quicker transitions between pulses.

Perforated Cutting - The plasma arc will cut through metal with gaps, like grating or mesh. The arc will remain constant while passing over areas that are not metal.

Pre-Gas - The duration of shielding gas released before the arc ignites. This ensures a protective environment, minimising contamination and improving weld quality.

Post-Gas (Welding) - The duration of shielding gas released after the welding arc stops. This provides continued protection to the welded area, preventing oxidation and ensuring a cleaner weld finish.

Post-Gas (Plasma Cutting) - The duration of air released after the plasma arc stops.

Pressure - The air flow pressure while plasma cutting.

Pulse - Alternates the welding current between a high and low value to aid in heat control and improve weld quality.

Pulse Frequency - The number of pulse cycles every second. Higher frequencies result in a more focused arc, while lower frequencies create a wider arc with more spread-out heat.

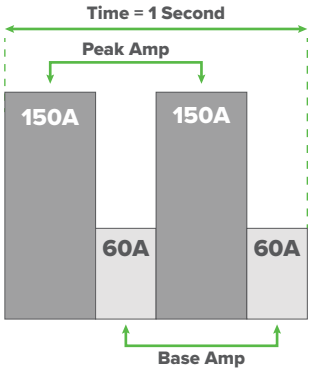

Pulse MMA - Welding with a pulsing welding current that alternates between a high and low value to aid in heat control and improve weld quality. It is used for out-of-position welding of steel pipes or when welding thin sheets.

Pulse Width - The time the arc stays at its peak amperage during the pulse cycle. Wider widths mean more penetration, while narrower widths offer more heat control.

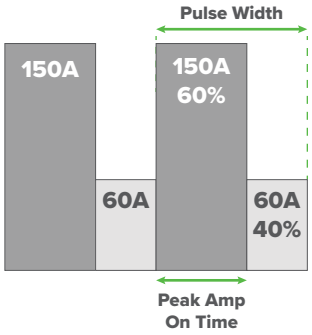

Purge - The Gas Purge function allows you to test and set the shielding gas flow rate. It also lets you back purge pipes and tubing being welded.

R

Remote Mode - Turn the remote control off or on for torch controls, wireless and wired foot pedals.

S

Smart-Set MIG - The Smart-Set MIG mode is a set of synergic programs that guide the user through the selection of required parameters in an easily understandable way for the optimal settings on every job.

Smart-Set TIG - The Smart-Set TIG mode is a set of synergic programs that guide the user through the selection of required parameters in an easily understandable way for the optimal settings on every job.

Spot Mode - Spot Mode provides precision in creating timed weld spots with controlled intervals and counts. It's ideal for consistent tacking or producing uniform joins across materials.

Spot Time - The duration for each spot weld.

Spot Pause Time - The time between each spot weld.

Start Amp - The amperage at the beginning of the welding process. A higher Start Amp provides a strong arc start, suitable for thicker materials, while a lower setting offers a gentler start for thin or sensitive materials.

T

Trigger Mode 2T - Initiates welding when the torch trigger is pressed and stops when released.

Trigger Mode 4T - Press the torch trigger once to start welding and release it. Press again to stop the weld. This mode is useful for longer welds and reducing hand fatigue.

Trigger Mode HCT - Heat Control Trigger (HCT) lets you set a base current which you can switch to at any time during a weld by pressing the trigger button. Heat Control Trigger Mode is great for manual heat input control as you go.

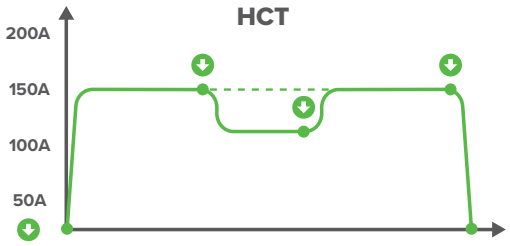

U

Up Slope - The time the welding current takes to rise from the Start Amp to the main welding current. Longer up slope times ensure smoother transitions, reducing sudden heat input.

V

VRD - A Voltage Reduction Device is a safety device that reduces the open-circuit voltage of a welding machine. This minimises the risk of electric shock, especially in hazardous areas like enclosed or moist environments.

19. MIG Torch & Consumables

19.1 M26 Digital Binzel Style MIG Torch

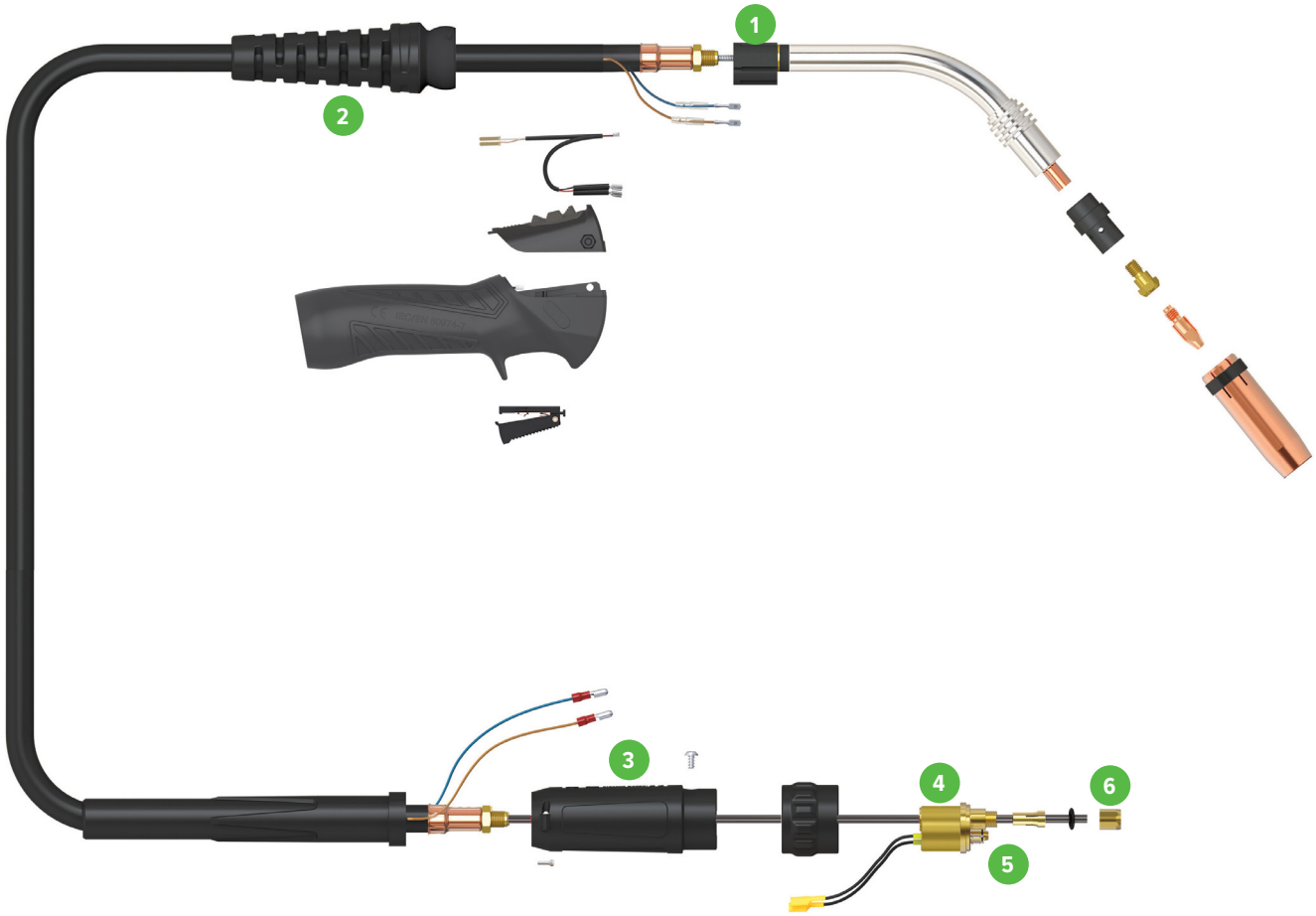

Length	3m	4m
SKU	U11194	U11195

1	UG1515	ERGO HANDLE LOCATION BODY
2	UEVG8016-BK	LARGE SUPPORT A/C WITH BALL JOINT
3	SC2578-L	GUN PLUG HOUSING
4	UB1528	GUN PLUG BODY C/W SPRING PINS
5	UB1524	GUN PLUG 'O' RING
6	UB1525	LINER NUT

COOLING METHOD	Air-Cooled
DUTY CYCLE - CO2	60% @ 270A
DUTY CYCLE - MIXED GAS	60% @ 240A
WIRE SIZE	0.8-1.2mm
STANDARD	EN60974-7

19.2 M26 Digital Binzel Style MIG Torch Consumables



Gas Diffuser

PCGD26	GAS DIFFUSER SUIT SB38 QTY 2
U11184	GAS DIFFUSER PLASTIC SUIT DM26 QTY2

Tip Holder

PCTH26M8S	TIP HOLDER SUIT DM26 QTY 2

Contact Tip

PCTAL0005-08	CONTACT TIPS ALUMINIUM BINZEL STYLE M8 0.8MM QTY 10
PCTAL0005-09	CONTACT TIPS ALUMINIUM BINZEL STYLE M8 0.9MM QTY 10
PCTAL0005-10	CONTACT TIPS ALUMINIUM BINZEL STYLE M8 1.0MM QTY 10
PCTAL0005-12	CONTACT TIPS ALUMINIUM BINZEL STYLE M8 1.2MM QTY 10
PCTAL0005-16	CONTACT TIPS ALUMINIUM BINZEL STYLE M8 1.6MM QTY 10
PCT0005-08	CONTACT TIPS BINZEL STYLE M8 0.8MM QTY 10
PCT0005-09	CONTACT TIPS BINZEL STYLE M8 0.9MM QTY 10
PCT0005-10	CONTACT TIPS BINZEL STYLE M8 1.0MM QTY 10
PCT0005-12	CONTACT TIPS BINZEL STYLE M8 1.2MM QTY 10

Gas Nozzle

PGN38CYL	GAS NOZZLE CYLINDRICAL SUIT SB38 QTY 2
PGN38CON	GAS NOZZLE CONICAL SUIT SB38 QTY 2

Liners



U41001	LINER BINZEL STYLE ALL-PURPOSE 0.8-1.2MM 3M
SLB3M	LINER BINZEL STYLE STEEL BLUE 0.6-0.8MM 3M
SLB4M	LINER BINZEL STYLE STEEL BLUE 0.6-0.8MM 4M
SLB5M	LINER BINZEL STYLE STEEL BLUE 0.6-0.8MM 5M
SLR3M	LINER BINZEL STYLE STEEL RED 0.9-1.2MM 3M
SLR4M	LINER BINZEL STYLE STEEL RED 0.9-1.2MM 4M
SLR5M	LINER BINZEL STYLE STEEL RED 0.9-1.2MM 5M
TLB3M	LINER BINZEL STYLE ALUMINIUM BLUE 0.6-0.8MM 3M
TLB4M	LINER BINZEL STYLE ALUMINIUM BLUE 0.6-0.8MM 4M
TLR3M	LINER BINZEL STYLE ALUMINIUM RED 0.9-1.2MM 3M
TLR4M	LINER BINZEL STYLE ALUMINIUM RED 0.9-1.2MM 4M
NKSTL-3.5MM	NECK SPRING FOR ALUMINIUM

20. TIG Torch & Consumables

20.1 T2 TIG Torch

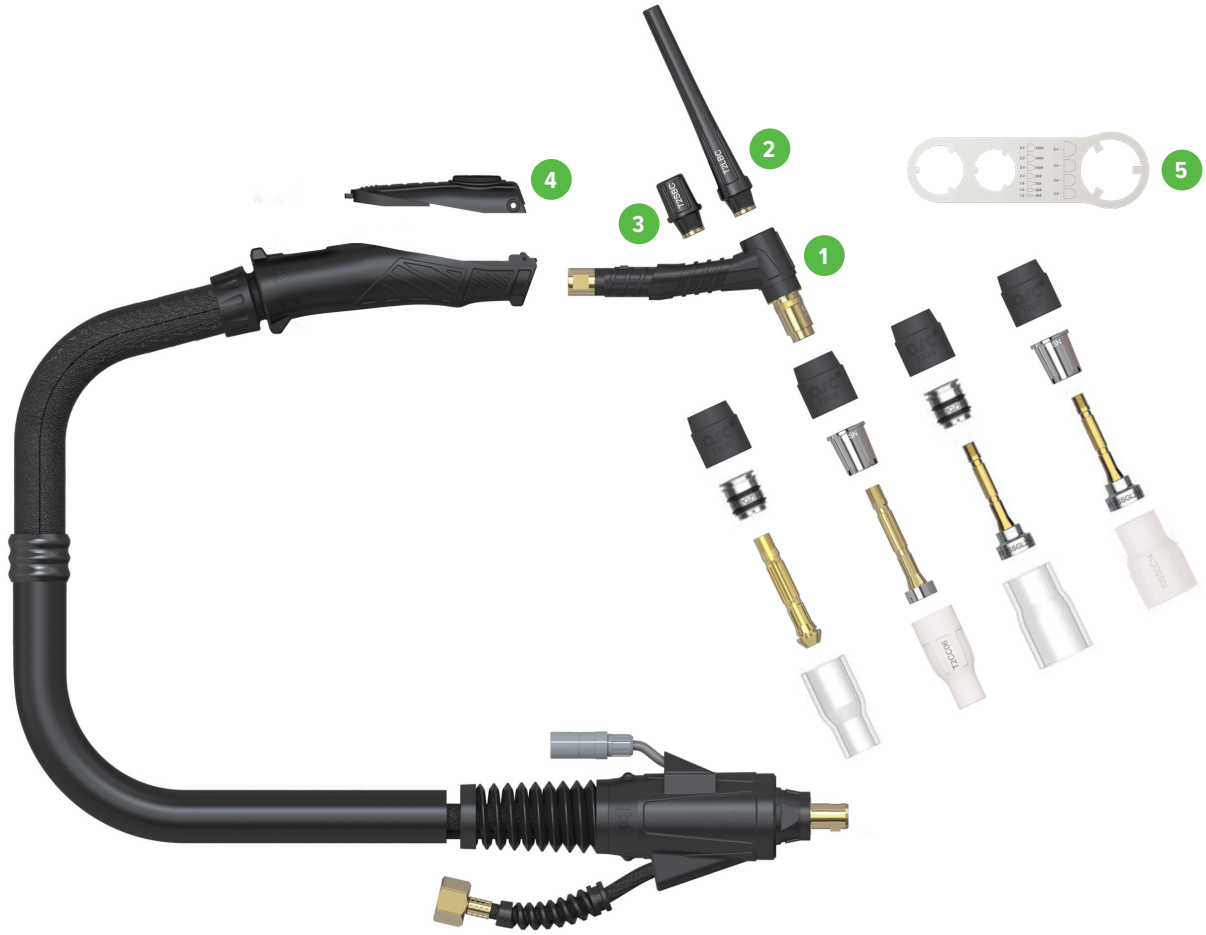

Length	Dinse 4m	Dinse 8m	Euro 4m
SKU	UMT2F4M	UMT2F8M	UMT24ME

1	UMCT2THF	TORCH HEAD FLEXIBLE SUIT T2
	UMCT2TH	TORCH HEAD SUIT T2
2	UMCT2LBC	LONG BACK CAP SUIT T2/T3W/T4W QTY 1
3	UMCT2SBC	SHORT BACK CAP SUIT T2/T3W/T4W QTY 1
4	UMCTMS	TIG TORCH MODULE SINGLE BUTTON SUIT T2/T3W/T3/T4W
	UMCTMK10KP	TIG TORCH MODULE HORIZONTAL ADJUSTMENT 10K POT SUIT T2/T3W/T3/T4W
	U11539	TIG TORCH MODULE DIGITAL 4 BUTTON SUIT T2/T3/T3W/T4W
	U11196	TIG TORCH MODULE BLANK SUIT T2/T3/T3W/T4W
5	UMCTSPAN	SPANNER SUIT T2/T3/T3W/T4W

COOLING METHOD	Air-Cooled
DUTY CYCLE - CO2	35% @ 190A
DUTY CYCLE - MIXED GAS	35% @ 135A
DINSE SIZE	35/50
ELECTRODE SIZE	1.0-4.0mm
STANDARD	EN60974-7

20.2 T2 TIG Torch Consumables

Standard



Head Gasket

UMCT2HG	HEAD GASKET SUIT T2/T3W/T4W QTY 1

Heat Zone Isolator

UMCT2SN	HEAT ZONE ISOLATOR SUIT T2/T3W/T4W QTY 1

Collet Body

UMCT2CB10	COLLET BODY SUIT T2/T3W/T4W 1.0MM QTY 1
UMCT2CB16	COLLET BODY SUIT T2/T3W/T4W 1.6MM QTY 1
UMCT2CB24	COLLET BODY SUIT T2/T3W/T4W 2.4MM QTY 1
UMCT2CB32	COLLET BODY SUIT T2/T3W/T4W 3.2MM QTY 1
UMCT2GL10	GAS LENS COLLET BODY SUIT T2/T3W/T4W 1.0MM QTY 1
UMCT2GL16	GAS LENS COLLET BODY SUIT T2/T3W/T4W 1.6MM QTY 1
UMCT2GL24	GAS LENS COLLET BODY SUIT T2/T3W/T4W 2.4MM QTY 1
UMCT2GL32	GAS LENS COLLET BODY SUIT T2/T3W/T4W 3.2MM QTY 1

Ceramic Cup

UMCT2C04	CERAMIC CUP SUIT T2/T3W/T4W SIZE 4 6MM QTY 1
UMCT2C05	CERAMIC CUP SUIT T2/T3W/T4W SIZE 5 8MM QTY 1
UMCT2C06	CERAMIC CUP SUIT T2/T3W/T4W SIZE 6 10MM QTY 1
UMCT2C07	CERAMIC CUP SUIT T2/T3W/T4W SIZE 7 11MM QTY 1
UMCT2C08	CERAMIC CUP SUIT T2/T3W/T4W SIZE 8 12.5MM QTY 1
UMCT2C10	CERAMIC CUP SUIT T2/T3W/T4W SIZE 10 16MM QTY 1

Quartz

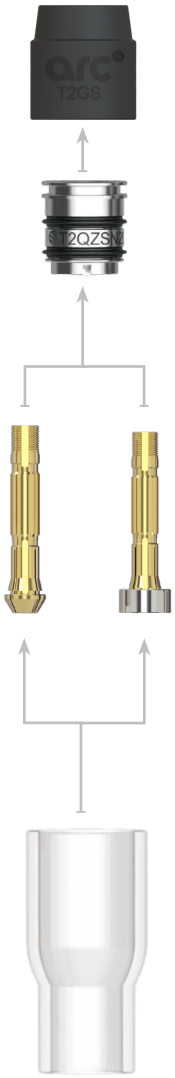

Head Gasket

UMCT2HG	HEAD GASKET SUIT T2/T3W/T4W QTY 1

Heat Zone Isolator

UMCT2QZSN	QUARTZ ZONE ISOLATOR SUIT T2/T3W/T4W QTY 1

Collet Body

UMCT2CB10	COLLET BODY SUIT T2/T3W/T4W 1.0MM QTY 1
UMCT2CB16	COLLET BODY SUIT T2/T3W/T4W 1.6MM QTY 1
UMCT2CB24	COLLET BODY SUIT T2/T3W/T4W 2.4MM QTY 1
UMCT2CB32	COLLET BODY SUIT T2/T3W/T4W 3.2MM QTY 1
UMCT2GL10	GAS LENS COLLET BODY SUIT T2/T3W/T4W 1.0MM QTY 1
UMCT2GL16	GAS LENS COLLET BODY SUIT T2/T3W/T4W 1.6MM QTY 1
UMCT2GL24	GAS LENS COLLET BODY SUIT T2/T3W/T4W 2.4MM QTY 1
UMCT2GL32	GAS LENS COLLET BODY SUIT T2/T3W/T4W 3.2MM QTY 1

Quartz Cup

UMCT2QZ06	QUARTZ CUP SUIT T2/T3W/T4W SIZE 6 QTY 1
UMCT2QZ08	QUARTZ CUP SUIT T2/T3W/T4W SIZE 8 QTY 1
UMCT2QZ10	QUARTZ CUP SUIT T2/T3W/T4W SIZE 9 QTY 1

Super Series



Head Gasket

UMCT2HG	HEAD GASKET SUIT T2/T3W/T4W QTY 1

Heat Zone Isolator

UMCT2SN	HEAT ZONE ISOLATOR SUIT T2/T3W/T4W QTY 1

Collet Body

UMCT2SSGL2016	GAS LENS COLLET BODY SUPER12 SUIT T2/T3W/T4W 1.6MM QTY 1
UMCT2SSGL2024	GAS LENS COLLET BODY SUPER12 SUIT T2/T3W/T4W 2.4MM QTY 1
UMCT2SSGL2032	GAS LENS COLLET BODY SUPER12 SUIT T2/T3W/T4W 3.2MM QTY 1
UMCT2SSGL2316	GAS LENS COLLET BODY SUPER14 SUIT T2/T3W/T4W 1.6MM QTY 1
UMCT2SSGL2324	GAS LENS COLLET BODY SUPER14 SUIT T2/T3W/T4W 2.4MM QTY 1
UMCT2SSGL2332	GAS LENS COLLET BODY SUPER14 SUIT T2/T3W/T4W 3.2MM QTY 1
UMCT2SSGL2816	GAS LENS COLLET BODY SUPER18 SUIT T2/T3W/T4W 1.6MM QTY 1
UMCT2SSGL2824	GAS LENS COLLET BODY SUPER18 SUIT T2/T3W/T4W 2.4MM QTY 1
UMCT2SSGL2832	GAS LENS COLLET BODY SUPER18 SUIT T2/T3W/T4W 3.2MM QTY 1

Ceramic Cup

UMCT2SSCC12	CERAMIC CUP SUPER12 SUIT T2/T3W/T4W SIZE 12 QTY 1
UMCT2SSCC14	CERAMIC CUP SUPER14 SUIT T2/T3W/T4W SIZE 14 QTY 1
UMCT2SSCC18	CERAMIC CUP SUPER18 SUIT T2/T3W/T4W SIZE 18 QTY 1

Super Series Quartz



Head Gasket

UMCT2HG	HEAD GASKET SUIT T2/T3W/T4W QTY 1

Heat Zone Isolator

UMCT2QZSN	QUARTZ ZONE ISOLATOR SUIT T2/T3W/T4W QTY 1

Collet Body

UMCT2SSGL2016	GAS LENS COLLET BODY SUPER12 SUIT T2/T3W/T4W 1.6MM QTY 1
UMCT2SSGL2024	GAS LENS COLLET BODY SUPER12 SUIT T2/T3W/T4W 2.4MM QTY 1
UMCT2SSGL2032	GAS LENS COLLET BODY SUPER12 SUIT T2/T3W/T4W 3.2MM QTY 1
UMCT2SSGL2316	GAS LENS COLLET BODY SUPER14 SUIT T2/T3W/T4W 1.6MM QTY 1
UMCT2SSGL2324	GAS LENS COLLET BODY SUPER14 SUIT T2/T3W/T4W 2.4MM QTY 1
UMCT2SSGL2332	GAS LENS COLLET BODY SUPER14 SUIT T2/T3W/T4W 3.2MM QTY 1
UMCT2SSGL2816	GAS LENS COLLET BODY SUPER18 SUIT T2/T3W/T4W 1.6MM QTY 1
UMCT2SSGL2824	GAS LENS COLLET BODY SUPER18 SUIT T2/T3W/T4W 2.4MM QTY 1
UMCT2SSGL2832	GAS LENS COLLET BODY SUPER18 SUIT T2/T3W/T4W 3.2MM QTY 1

Quartz Cup

UMCT2SSQZ12	QUARTZ CUP SUPER12 SUIT T2/T3W/T4W SIZE 12 QTY 1
UMCT2SSQZ14	QUARTZ CUP SUPER14 SUIT T2/T3W/T4W SIZE 14 QTY 1
UMCT2SSQZ18	QUARTZ CUP SUPER18 SUIT T2/T3W/T4W SIZE 18 QTY 1

21. Plasma Torch & Consumables

21.1 SC80 Plasma Torch

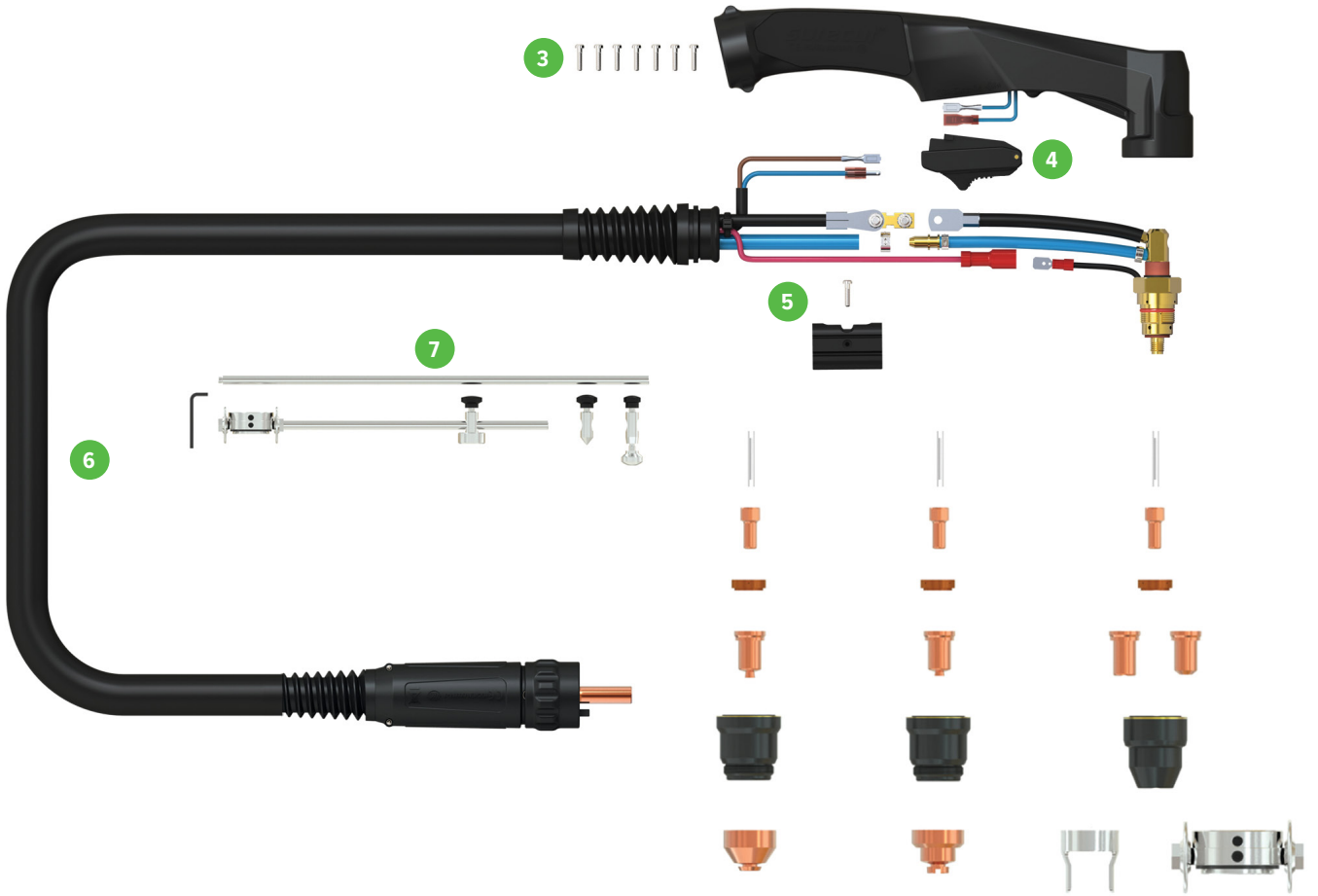

Length	**6m**
SKU	WG-SC80-60-CC1-1.0-1

1	SC8001	PLASMA TORCH HEAD SUIT SC80
2	SC8014	PLASMA HANDLE
3	SCSP1	SCREW PACK
4	SC2516	PLASMA TRIGGER
5	SC8015	LOCATION BLOCK
6	SC8019-60-CF4	CABLE ASSEMBLY
7	SC8050	CIRCLE CUTTING KIT SUIT SC80

COOLING METHOD	Air-Cooled
DUTY CYCLE	60% @ 80A
CUTTING THICKNESS	20-25mm
GAS	Air/N2
GAS PRESSURE	4.5-5.0 Bar / 65-75 psi
GAS FLOW	110L/min
IGNITION	Pilot Arc
POST FLOW	90s
STANDARD	EN60974-7

21.2 SC80 Plasma Torch Consumables

Gouging



Cooling Tube

SC8002	COOLING TUBE SUIT SC80 QTY 1

Electrode

PSC8004	ELECTRODE SUIT SC80 QTY 5

Swirl Ring

SC8006	SWIRL RING SUIT SC80 QTY 1

Gouging Tips

PSC8028-16	GOUGING TIPS SUIT SC80 1.6MM QTY 5

Shield Cap Body

SC8031	SHIELD CAP BODY SUIT SC80 QTY 1

Shield Cap Gouging

SC8043	SHIELD CAP GOUGING SUIT SC80 QTY 1

Contact Cutting



Cooling Tube

SC8002	COOLING TUBE SUIT SC80 QTY 1

Electrode

PSC8004	ELECTRODE SUIT SC80 QTY 5

Swirl Ring

SC8006	SWIRL RING SUIT SC80 QTY 1

Contact Cutting Tips

PSC8026-10	CONTACT CUTTING TIPS SUIT SC80 1.0MM 40-50A QTY 5
PSC8026-11	CONTACT CUTTING TIPS SUIT SC80 1.1MM 50-60A QTY 5
PSC8026-12	CONTACT CUTTING TIPS SUIT SC80 1.2MM 60-70A QTY 5
PSC8026-13	CONTACT CUTTING TIPS SUIT SC80 1.3MM 70-80A QTY 5

Shield Cap Body

SC8031	SHIELD CAP BODY SUIT SC80 QTY 1

Shield Cap Contact Cutting

SC8041	SHIELD CAP CONTACT CUTTING SUIT SC80/SC120 QTY 1

Standoff Cutting

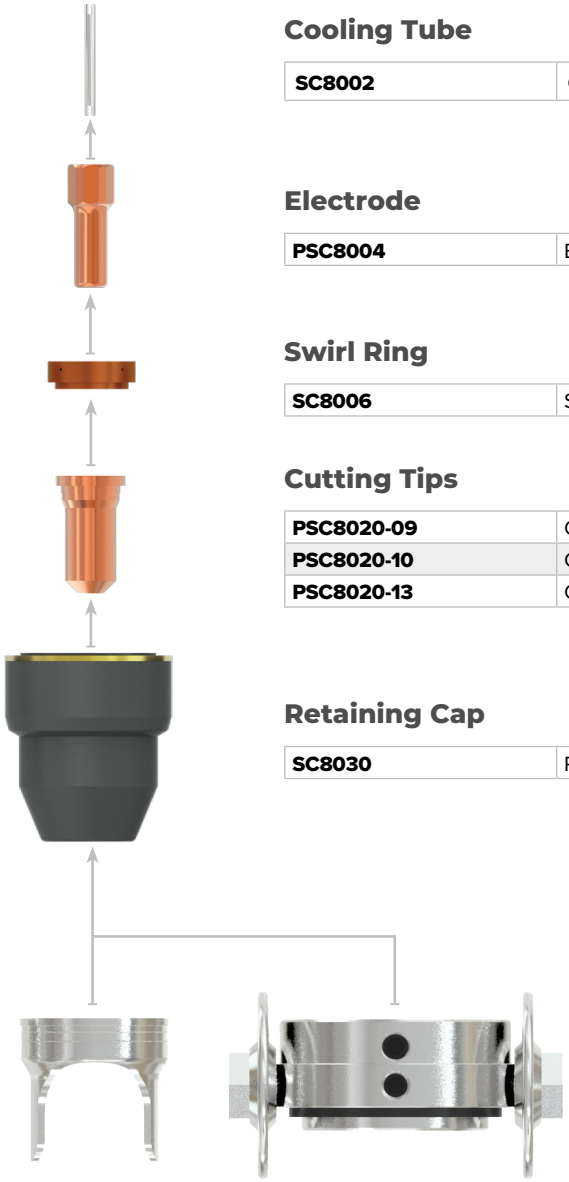

Cooling Tube

SC8002	COOLING TUBE SUIT SC80 QTY 1

Electrode

PSC8004	ELECTRODE SUIT SC80 QTY 5

Swirl Ring

SC8006	SWIRL RING SUIT SC80 QTY 1

Cutting Tips

PSC8020-09	CUTTING TIPS SUIT SC80 0.9MM 30-40A QTY 5
PSC8020-10	CUTTING TIPS SUIT SC80 1.0MM 40-50A QTY 5
PSC8020-13	CUTTING TIPS SUIT SC80 1.3MM 70-80A QTY 5

Retaining Cap

SC8030	RETAINING CAP SUIT SC80 QTY 1

Standoff Guide

SC8040	STANDOFF GUIDE SUIT SC80 QTY 1

Cutting Guide

SC8051	CUTTING GUIDE SUIT SC80 QTY 1

22. Recommended Accessories



W50 Water Cooler
U11243



T40 Welding Trolley
U11242



Binzel Style Digital 26 MIG Torch Consumables Starter Kit
UMSK26



220A Spool Gun
U11240



300A Push-Pull Gun
U11241



Foot Pedal
U11100 (Wireless)
U11104 (Wired)



T2 Consumable Starter Kit
U42005

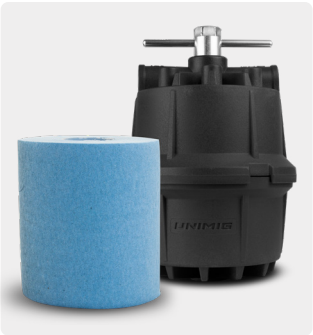

Plasma Cutter Air Filter
U11235



SC80 Plasma Circle Cutting Kit
SC8050



SC80 Plasma Cutting Guide
SC8051

MIG Wire



U61001	HYPERCORE T-11 FLUX-CORED SELF-SHIELDED WIRE 0.8MM 4.54KG
U61002	HYPERCORE T-11 FLUX-CORED SELF-SHIELDED WIRE 0.9MM 4.54KG
U61014	HYPERCORE T-11 FLUX-CORED SELF-SHIELDED WIRE 1.2MM 4.54KG
U11162	HYPERMIG 5356 ALUMINIUM PREMIUM 1.0MM 7KG
U11163	HYPERMIG 5356 ALUMINIUM PREMIUM 1.2MM 7KG
MS.6B	ER70S-6 MILD STEEL WIRE 0.6MM 5KG
MS.8B	ER70S-6 MILD STEEL WIRE 0.8MM 5KG
MS.9B	ER70S-6 MILD STEEL WIRE 0.9MM 5KG
MS.6C	HYPERMIG ER70S-6 MILD STEEL 0.6MM 15KG
MS.8C	HYPERMIG ER70S-6 MILD STEEL 0.8MM 15KG
MS.9C	HYPERMIG ER70S-6 MILD STEEL 0.9MM 15KG
MS.12C	HYPERMIG ER70S-6 MILD STEEL 1.2MM 15KG
SS316LSI-0.8-5	316L STAINLESS STEEL WIRE 0.8MM 5KG
SS316LSI-0.9-5	316L STAINLESS STEEL WIRE 0.9MM 5KG
SS308LSI-0.9	HYPERMIG 308LSI STAINLESS STEEL 0.9MM 12.5KG
SS308LSI-1.2	HYPERMIG 308LSI STAINLESS STEEL 1.2MM 12.5KG
SS309LSI-0.9	HYPERMIG 309LSI STAINLESS STEEL 0.9MM 12.5KG
SS309LSI-1.2	HYPERMIG 309LSI STAINLESS STEEL 1.2MM 12.5KG
SS316LSI-0.9	HYPERMIG 316LSI STAINLESS STEEL 0.9MM 12.5KG
SS316LSI-1.2	HYPERMIG 316LSI STAINLESS STEEL 1.2MM 12.5KG

Drive Rollers



U11489	DRIVE ROLLER 37/24 U ALUMINIUM 0.8/0.9MM
U11493	DRIVE ROLLER 37/24 U ALUMINIUM 0.9/1.0MM
U11492	DRIVE ROLLER 37/24 U ALUMINIUM 0.9/1.2MM
U11490	DRIVE ROLLER 37/24 U ALUMINIUM 1.0/1.2MM
U11491	DRIVE ROLLER 37/24 U ALUMINIUM 1.2/1.6MM
U11485	DRIVE ROLLER 37/24 F KNURLED 0.8/0.9MM
U11488	DRIVE ROLLER 37/24 F KNURLED 0.9/1.2MM
U11486	DRIVE ROLLER 37/24 F KNURLED 1.0/1.2MM
U11487	DRIVE ROLLER 37/24 F KNURLED 1.2/1.6MM
U11479	DRIVE ROLLER 37/24 V STEEL 0.6/0.8MM
U11483	DRIVE ROLLER 37/24 V STEEL 0.8/0.9MM
U11480	DRIVE ROLLER 37/24 V STEEL 0.8/1.0MM
U11484	DRIVE ROLLER 37/24 V STEEL 0.9/1.2MM
U11481	DRIVE ROLLER 37/24 V STEEL 1.0/1.2MM
U11482	DRIVE ROLLER 37/24 V STEEL 1.2/1.6MM

TIG Welding Rods



AT4043-2.4-5	4043 TIG FILLER ROD 2.4MM 5KG
AT4043-3.2-5	4043 TIG FILLER ROD 3.2MM 5KG
AT5356-1.6-1KG	5356 TIG FILLER ROD 1.6MM 1KG
AT5356-1.6-5	5356 TIG FILLER ROD 1.6MM 5KG
AT5356-2.4-1KG	5356 TIG FILLER ROD 2.4MM 1KG
AT5356-2.4-5	5356 TIG FILLER ROD 2.4MM 5KG
AT5356-3.2-1KG	5356 TIG FILLER ROD 3.2MM 1KG
AT5356-3.2-5	5356 TIG FILLER ROD 3.2MM 5KG
TG102ER70S-2-1.6	ER70S-2-TIG FILLER ROD 1.6MM 5KG TRIPLE DEOXIDISED
TG102ER70S-2-2.4	ER70S-2-TIG FILLER ROD 2.4MM 5KG TRIPLE DEOXIDISED
TG4ER70S-4-1.6	ER70S-4-TIG FILLER ROD 1.6MM 5KG DOUBLE DEOXIDISED
TG4ER70S-4-2.4	ER70S-4-TIG FILLER ROD 2.4MM 5KG DOUBLE DEOXIDISED
TG2ER70S-6-1.6	ER70S-6-TIG FILLER ROD 1.6MM 5KG
TG2ER70S-6-2.4	ER70S-6-TIG FILLER ROD 2.4MM 5KG
TI308L-1.6	308L TIG FILLER ROD 1.6MM 5KG
TI308L-2.4	308L TIG FILLER ROD 2.4MM 5KG
TI309L-1.6	309L TIG FILLER ROD 1.6MM 5KG
TI309L-2.4	309L TIG FILLER ROD 2.4MM 5KG
TI316L-1.2	316L TIG FILLER ROD 1.2MM 5KG
TI316L-1.6-1	316L TIG FILLER ROD 1.6MM 1KG
TI316L-1.6	316L TIG FILLER ROD 1.6MM 5KG
TI316L-2.4-1	316L TIG FILLER ROD 2.4MM 1KG
TI316L-2.4	316L TIG FILLER ROD 2.4MM 5KG
TI316L-3.2	316L TIG FILLER ROD 3.2MM 5KG

TIG Tungsten Electrodes



PTR0003-10	CERIATED TUNGSTEN GREY 1.0MM QTY 10
PTR0003-16	CERIATED TUNGSTEN GREY 1.6MM QTY 10
PTR0003-24	CERIATED TUNGSTEN GREY 2.4MM QTY 10
PTR0003-32	CERIATED TUNGSTEN GREY 3.2MM QTY 10
PTR0002-16	LANTHANATED TUNGSTEN GOLD 1.6MM QTY 10
PTR0002-24	LANTHANATED TUNGSTEN GOLD 2.4MM QTY 10
PTR0002-32	LANTHANATED TUNGSTEN GOLD 3.2MM QTY 10
PTR0005-16	RARE EARTH TUNGSTEN PURPLE 1.6MM QTY 10
PTR0005-24	RARE EARTH TUNGSTEN PURPLE 2.4MM QTY 10
PTR0005-32	RARE EARTH TUNGSTEN PURPLE 3.2MM QTY 10
PTR0004-10	THORIATED TUNGSTEN RED 1.0MM QTY 10
PTR0004-16	THORIATED TUNGSTEN RED 1.6MM QTY 10
PTR0004-24	THORIATED TUNGSTEN RED 2.4MM QTY 10
PTR0004-32	THORIATED TUNGSTEN RED 3.2MM QTY 10
PTR0006-10	ZIRCONIATED TUNGSTEN WHITE 1.0MM QTY 10
PTR0006-16	ZIRCONIATED TUNGSTEN WHITE 1.6MM QTY 10
PTR0006-24	ZIRCONIATED TUNGSTEN WHITE 2.4MM QTY 10
PTR0006-32	ZIRCONIATED TUNGSTEN WHITE 3.2MM QTY 10

MMA Welding Electrodes



U63028	HYPERARC NI 55 CAST IRON ELECTRODES 2.6MM 1KG
U63029	HYPERARC NI 55 CAST IRON ELECTRODES 3.2MM 1KG
U63026	HYPERARC NI 98 CAST IRON ELECTRODES 2.6MM 1KG
U63027	HYPERARC NI 98 CAST IRON ELECTRODES 3.2MM 1KG
U63025	HYPERARC 531 HARDFACING ELECTRODES 3.2MM 1KG
U63014	HYPERARC 309L STAINLESS STEEL ELECTRODES 2.6MM 2KG
U63015	HYPERARC 309L STAINLESS STEEL ELECTRODES 3.2MM 2KG
U63017	HYPERARC 312L STAINLESS STEEL ELECTRODES 2.6MM 1KG
U63019	HYPERARC 312L STAINLESS STEEL ELECTRODES 2.6MM 2KG
U63018	HYPERARC 312L STAINLESS STEEL ELECTRODES 3.2MM 1KG
U63020	HYPERARC 312L STAINLESS STEEL ELECTRODES 3.2MM 2KG
U63021	HYPERARC 316L STAINLESS STEEL ELECTRODES 2.6MM 1KG
U63023	HYPERARC 316L STAINLESS STEEL ELECTRODES 2.6MM 2KG
U63022	HYPERARC 316L STAINLESS STEEL ELECTRODES 3.2MM 1KG
U63024	HYPERARC 316L STAINLESS STEEL ELECTRODES 3.2MM 2KG
U63006	HYPERARC 16 TWIN COAT LOW-HYDROGEN ELECTRODES 2.6MM 1KG
U63008	HYPERARC 16 TWIN COAT LOW-HYDROGEN ELECTRODES 2.6MM 2KG
U63007	HYPERARC 16 TWIN COAT LOW-HYDROGEN ELECTRODES 3.2MM 1KG
U63009	HYPERARC 16 TWIN COAT LOW-HYDROGEN ELECTRODES 3.2MM 2KG
U63010	HYPERARC 16 TWIN COAT LOW-HYDROGEN ELECTRODES 4.0MM 2KG
U63002	HYPERARC 6013 GENERAL PURPOSE ELECTRODES 3.2MM 1KG
U63030	HYPERARC 6013 GENERAL PURPOSE ELECTRODES 2.0MM 1KG
U63031	HYPERARC 6013 GENERAL PURPOSE ELECTRODES 2.0MM 2.5KG
U63001	HYPERARC 6013 GENERAL PURPOSE ELECTRODES 2.6MM 1KG
U63032	HYPERARC 6013 GENERAL PURPOSE ELECTRODES 2.6MM 2.5KG
U63003	HYPERARC 6013 GENERAL PURPOSE ELECTRODES 2.6MM 5KG
U63033	HYPERARC 6013 GENERAL PURPOSE ELECTRODES 3.2MM 2.5KG
U63004	HYPERARC 6013 GENERAL PURPOSE ELECTRODES 3.2MM 5KG
U63005	HYPERARC 6013 GENERAL PURPOSE ELECTRODES 4.0MM 5KG
U63011	HYPERARC 7018 LOW-HYDROGEN ELECTRODES 2.6MM 2KG
U63012	HYPERARC 7018 LOW-HYDROGEN ELECTRODES 3.2MM 2KG
U63013	HYPERARC 7018 LOW-HYDROGEN ELECTRODES 4.0MM 2KG

UNIMIG



100%
AUSTRALIAN
OWNED

unimig.com.au

@UNIMIG